aluminium profile system

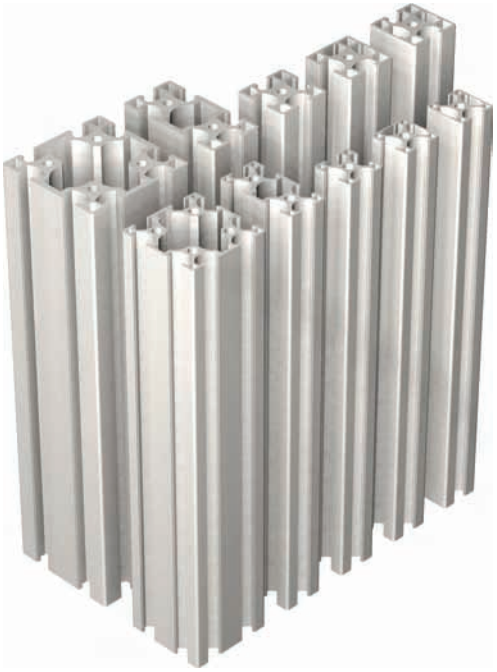

series 40 profiles

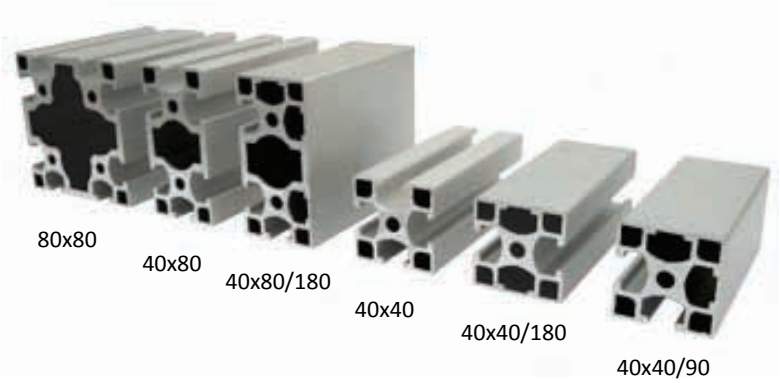

series 30 profiles

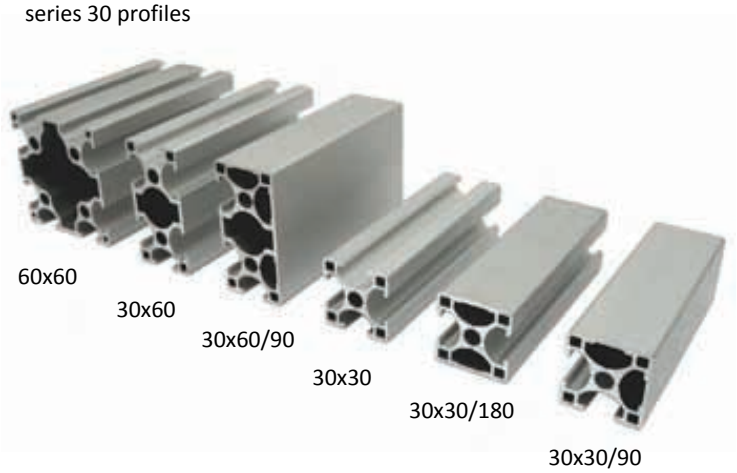

introduction

Aluminium profiles are provided with longitudinal grooves which can be used in conjunction with connecting elements and can also perform a whole range of additional functions.

All profiles have been designed to deliver maximum strength for the material used.

Natural anodised finish is resistant to scratching and corrosion.

Two profiles series:
series 40 6 profiles, 10mm groove
series 30 6 profles, 10mm groove

Uniform modular dimensions mean that the connecting elements and accessories are fully interchangeable.

design and assembly tips

1. for lower loads application use combination of series 30 and 40 profiles.

2. where possible, the vertical profiles should extend through the entire height

3. where required, profiles should be assembled so that the larger section dimension oppose the load in order to achieve vertical strength.

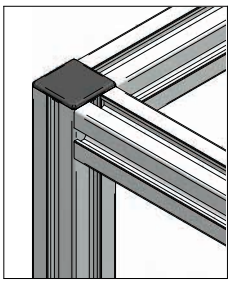

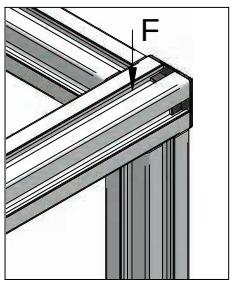

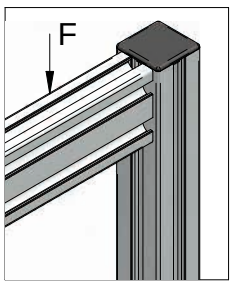

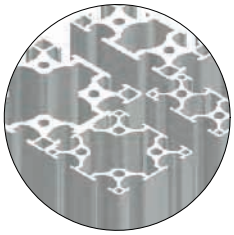

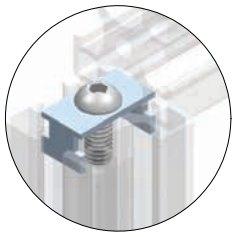

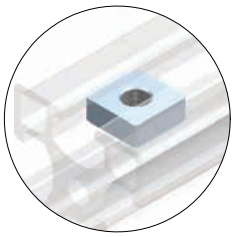

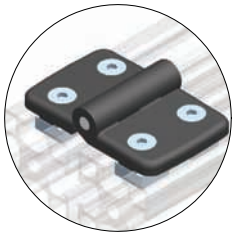

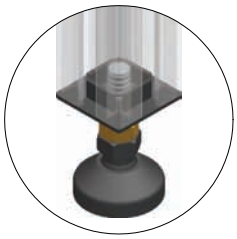

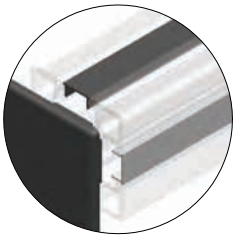

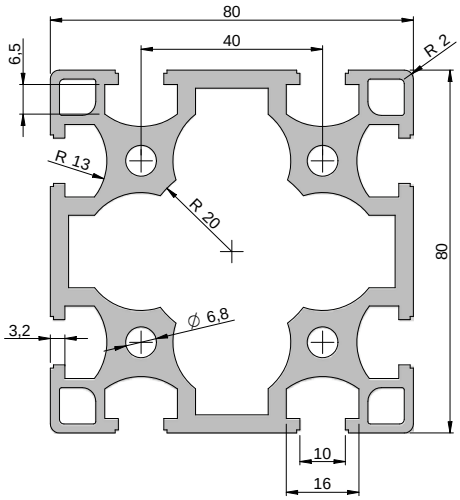

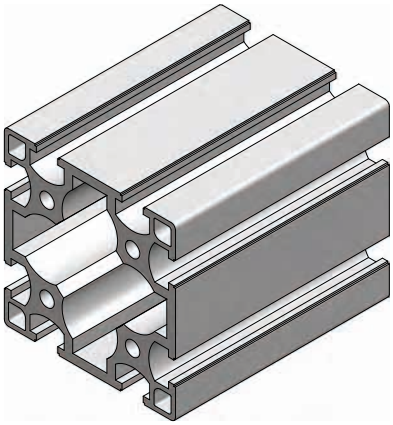

80x80 profile
Part Number: 265.80

I_{xy} = 125.49 cm^4
W_{xy} = 31.37 cm^3
A = 18.45 cm^2
weight = 5.00 kg/m
max. length: 6000 mm

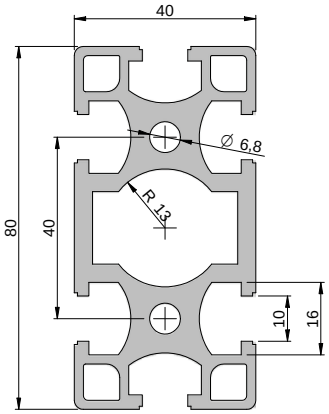

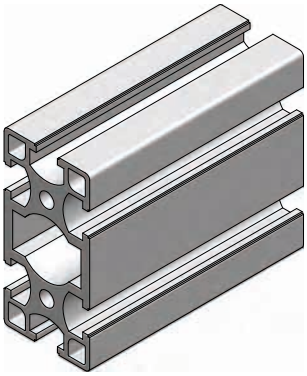

40x80 profile
Part Number: 026.34

I_x = 63.45 cm^4
I_y = 17.94 cm^4
W_x = 15.86 cm^3
W_y = 8.97 cm^3
A = 11.37 cm^2
weight = 3.07 kg/m
max. length: 6000 mm

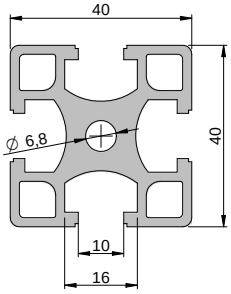

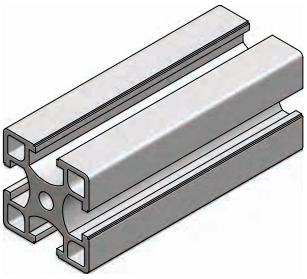

40x40 profile
Part Number: 026.33

I_{xy} = 8.16 cm^4
W_{xy} = 4.08 cm^3
A = 5.84 cm^2
weight = 1.58 kg/m
max. length: 6000 mm

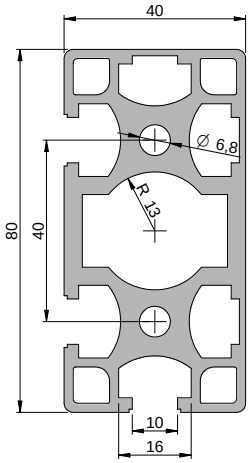

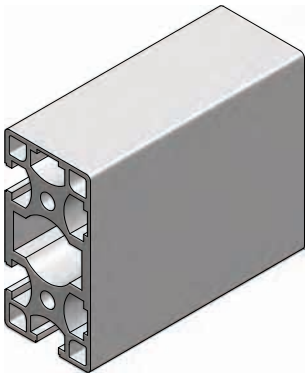

40x80/90 profile
Part Number: 026.36

I_x = 74.24 cm^4
I_y = 20.98 cm^4
W_x = 18.56 cm^3
W_y = 10.49 cm^3
A = 11.89 cm^2
weight = 3.21 kg/m
max. length: 6000 mm

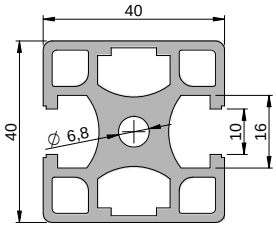

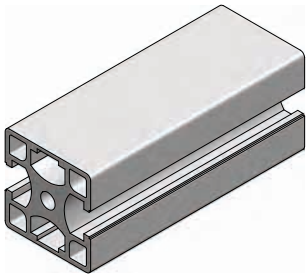

40x40/180 profile
Part Number: 026.38

I_x = 9.34 cm^4
I_y = 8.20 cm^4
W_x = 4.67 cm^3
W_y = 4.10 cm^3
A = 6.18 cm^2
weight = 1.67 kg/m
max. length: 6000 mm

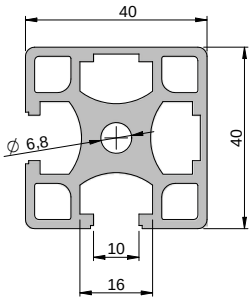

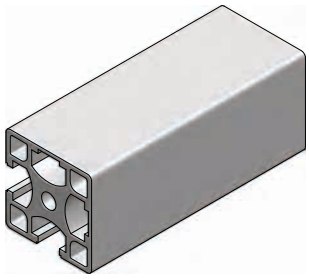

40x40/90 profile
Part Number: 026.32

I_{xy} = 8.82 cm^4
W_x = 4.41 cm^3
A = 6.18 cm^2
weight = 1.67 kg/m
max. length: 6000 mm

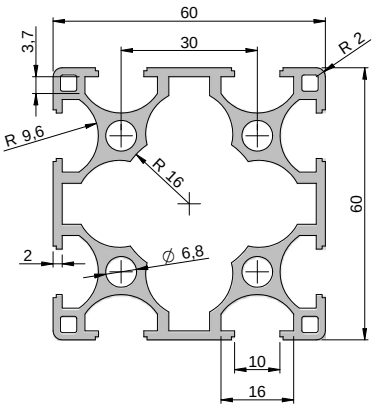

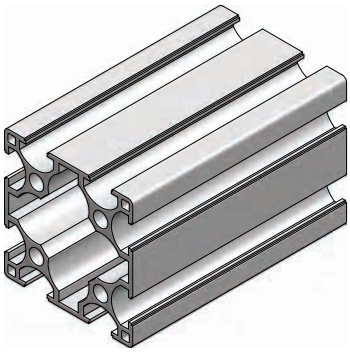

60x60 profile
Part Number: 439.66

I_{xy} = 32.52 cm^4
W_{xy} = 10.84 cm^3
A = 8.03 cm^2
weight = 2.17 kg/m
max. length: 6000 mm

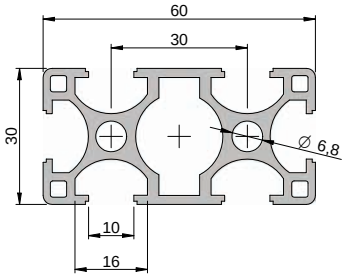

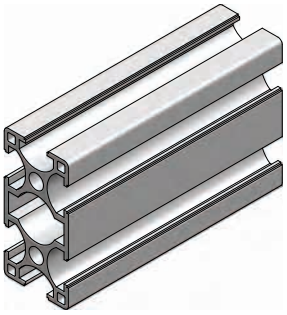

30x60 profile
Part Number: 419.09

I_x = 17.47 cm^4
I_y = 4.73 cm^4
W_x = 5.82 cm^3
W_y = 3.15 cm^3
A = 5.16 cm^2
weight = 1.39 kg/m
max. length: 6000 mm

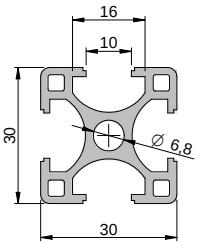

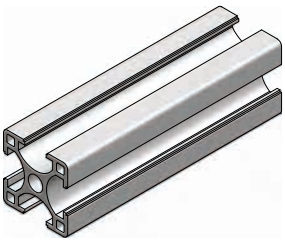

30x30 profile
Part Number: 419.06

I_{xy} = 2.44 cm^4
W_{xy} = 1.62 cm^3
A = 2.79 cm^2
weight = 0.75 kg/m
max. length: 6000 mm

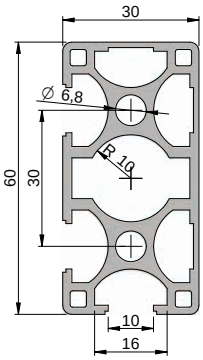

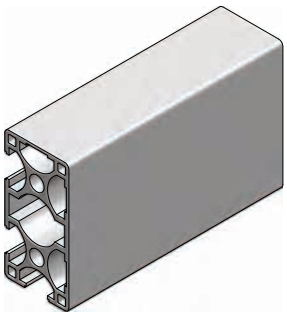

30x60/90 profile
Part Number: 419.36

I_x = 20.44 cm_4
I_y = 5.53 cm_4
W_x = 6.81 cm_3
W_y = 3.68 cm_3
A = 5.63 cm_2
weight = 1.52 kg/m
max. length: 6000 mm

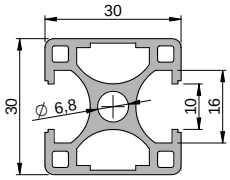

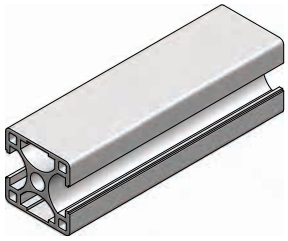

30x30/180 profile
Part Number: 439.18

I_x = 2.47 cm_4
I_y = 3.11 cm_4
W_x = 1.64 cm_3
W_y = 2.07 cm_3
A = 3.12 cm_2
weight = 0.84 kg/m
max. length: 6000 mm

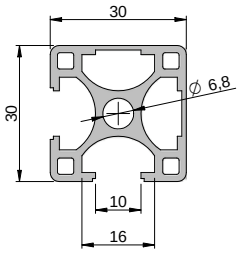

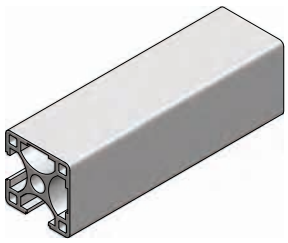

30x30/90 profile
Part Number: 439.45

I_{xy} = 2.69 cm_4
W_{xy} = 1.79 cm_3
A = 3.12 cm_2
weight = 0.84 kg/m
max. length: 6000 mm

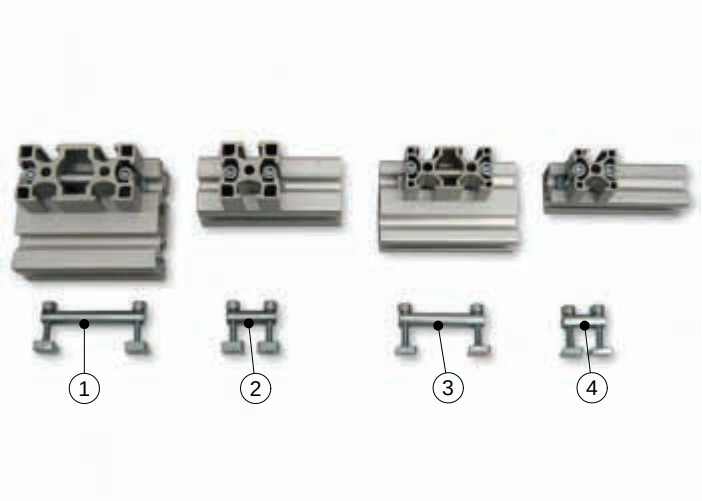

bolt connector

this type of connection applies for profiles which need to be moved subsequently.

recommended type of connection for addition into existing frames.

1. bolt connector 80 (for 40x80 and 80x80)
2. bolt connector 40 (for 40x40 and 40x80)
3. bolt connector 60 (for 30x60 and 60x60)
4. bolt connector 30 (for 30x30 and 30x60)

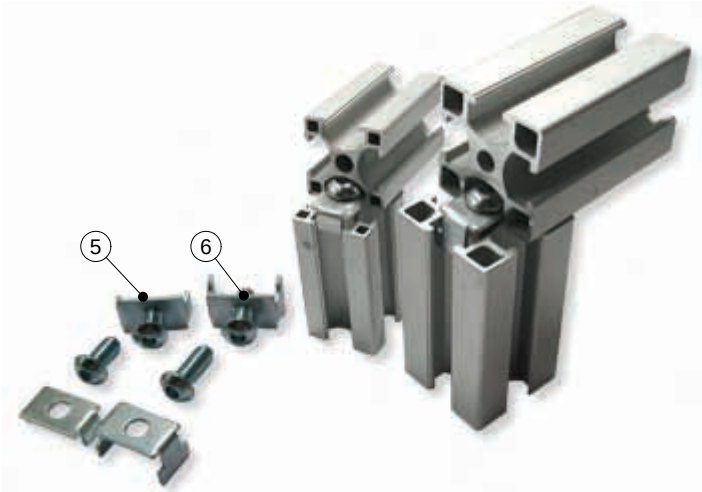

bracket connector

5. bracket connector M8-10 (for 30 series profiles)
6. bracket connector M8-16 (for 40 series profiles)

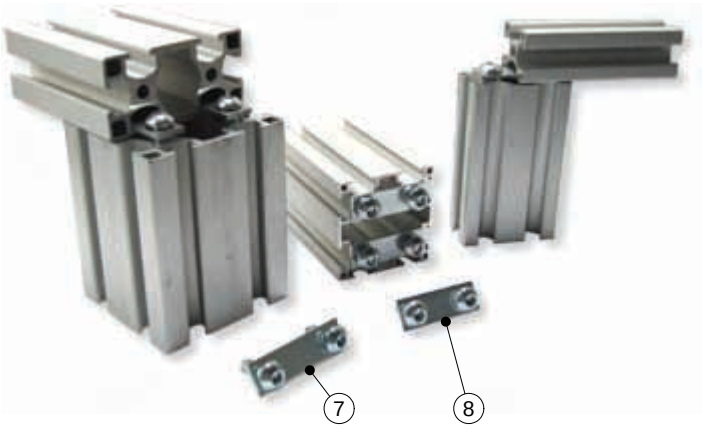

plate connector

7. 40x80 plate connector (for 40 series profiles)
8. 30x60 plate connector (for 30 series profiles)

	80x80	40x80	40x40	40x40/90
	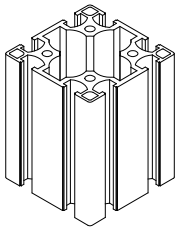	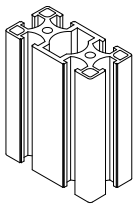	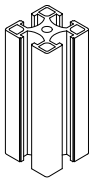	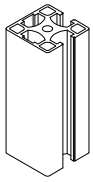
M8-16 bracket connector p/n 026.07 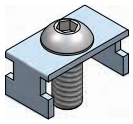 page 72	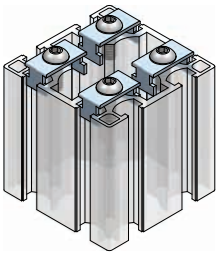	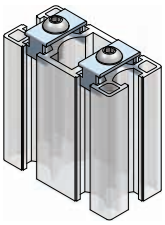	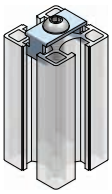	
40x80 plate connector p/n 046.48 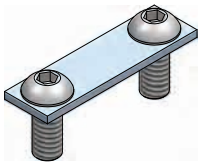 page 73	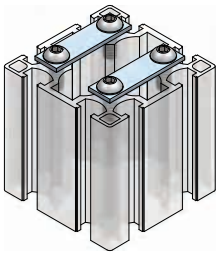	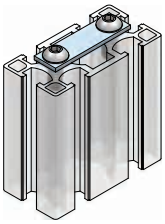		
bolt connector 40 p/n 056.02 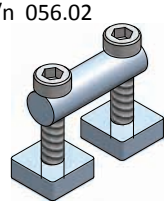 page 74		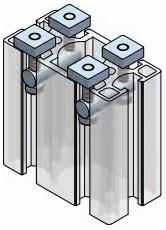	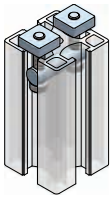	
bolt connector 80 p/n 056.03 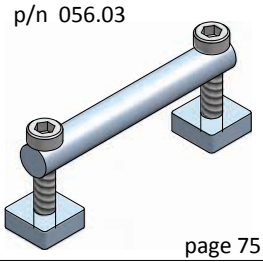 page 75	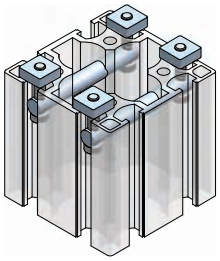	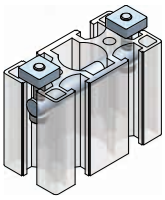		

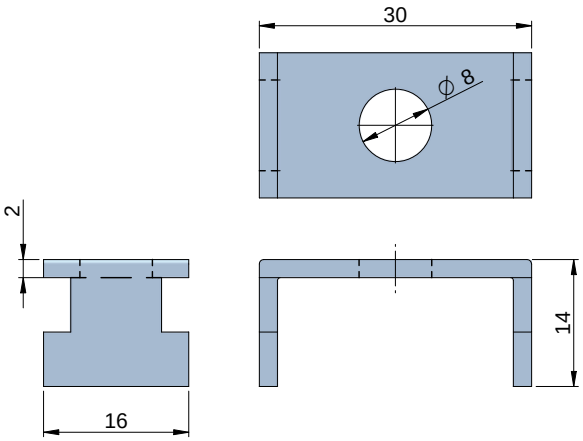

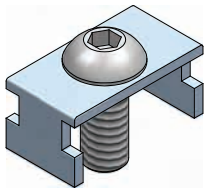

M8-16 bracket connector
Part Number: 026.07

consisting of one M8x20 bolt and one bracket.

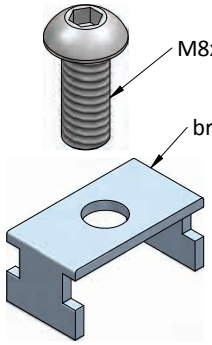

drilling diagram for right angled connection

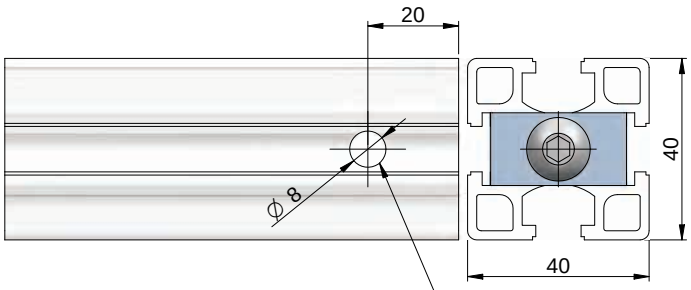

step 1
tap end M8,
20mm deep

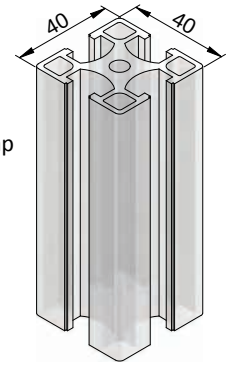

step 2
place bracket on top of profile,
screw partially into profile, allow 4-5mm gap

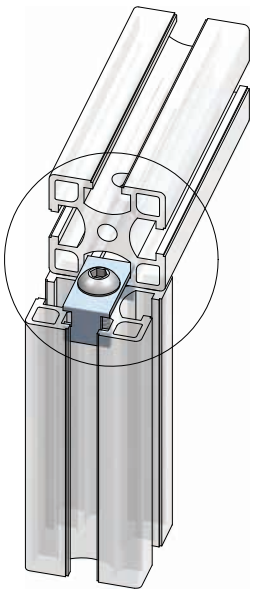

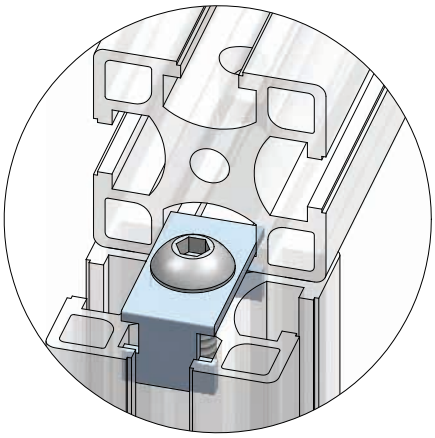

step 3
slide the other piece, line up access hole with bolt in bracket connector assembly

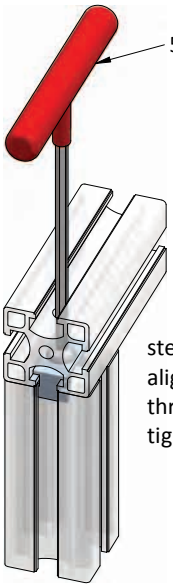

step 4
align faces, insert alen key through access hole and tighten firmly (max 12Nm)

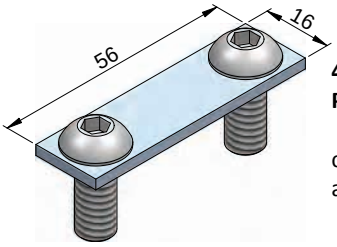

40x80 plate connector
Part Number: 046.48

consisting of two M8x20 bolts
and one 40x80 plate

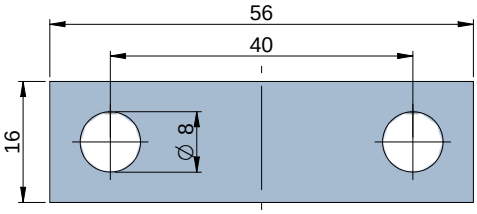

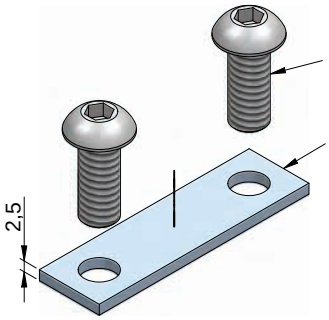

drilling diagram for
right angled connection

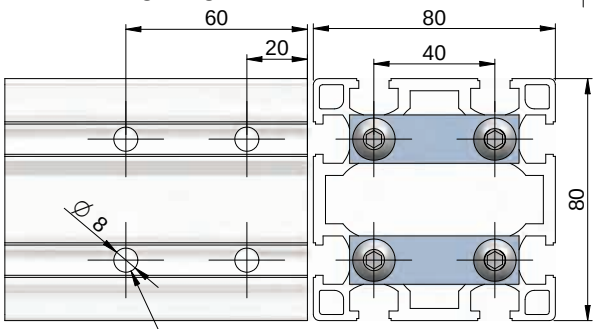

alen key
access holes

step 2
place plate on top of
profile, screw partially into
profile, allow 4-5mm gap

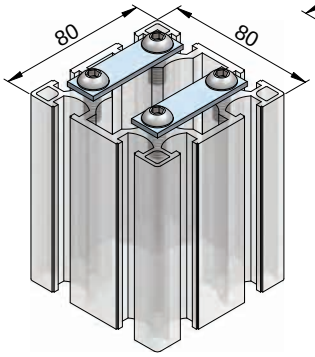

step 1
tap end M8,
both holes, 20mm deep

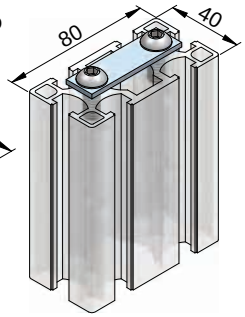

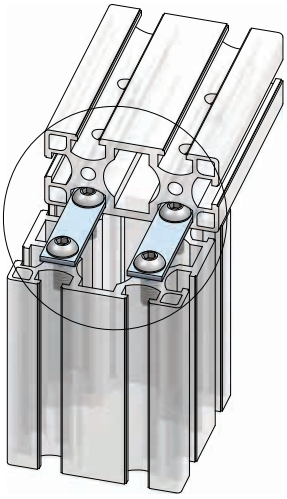

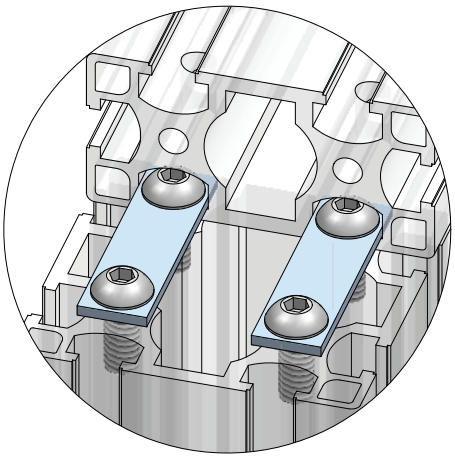

step 3
slide the other piece, line up
access hole with bolt in 40x80
plate assembly

5mm alen key

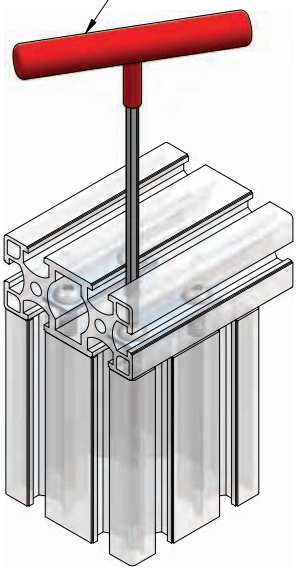

step 4
align faces, insert alen key
through access hole and
tighten firmly (max 12Nm)

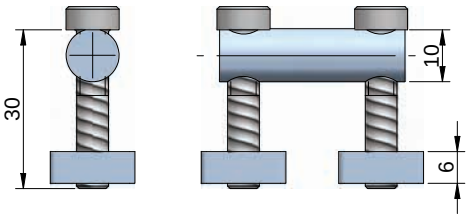

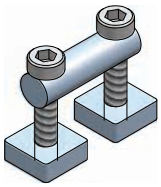

bolt connector 40
Part Number: 056.02

consisting of:
one 10mm pin, 35mm long
two M6x30 cap screws
two 16x16x6/M6 sq nuts

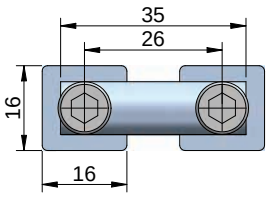

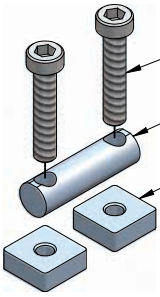

application

used in 40x40 and 40x80 profiles

this type of connection applies for profiles which need to be moved subsequently.

recommended type of connection for addition into existing frames.

bolt connector 40
drilling diagram

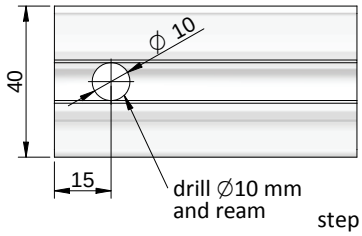

step 1
drill 10mm hole
15mm from end
and ream

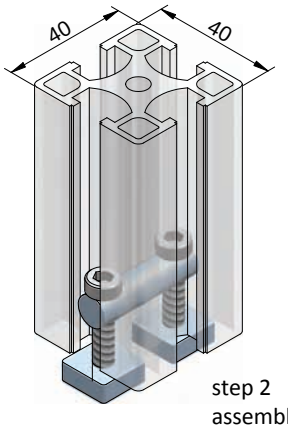

step 2
assembly pin with bolts and
square nuts as shown

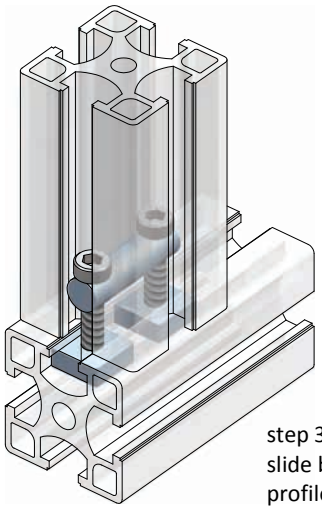

step 3
slide bolt connector 40 into other
profile, position in location and
tighten firmly with 5mm alen key

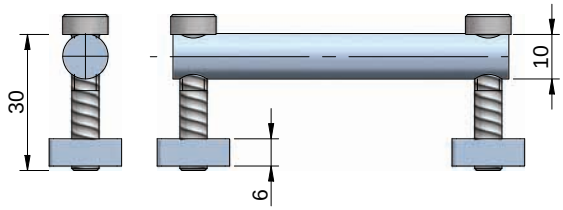

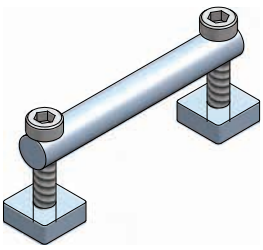

bolt connector 80
Part Number: 056.03

consisting of:
one 10mm pin, 74mm long
two M6x30 cap screws
two 16x16x6/M6 sq nuts

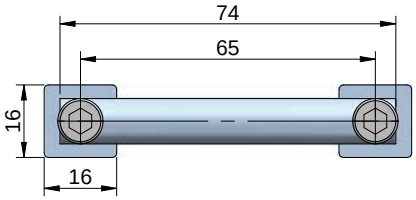

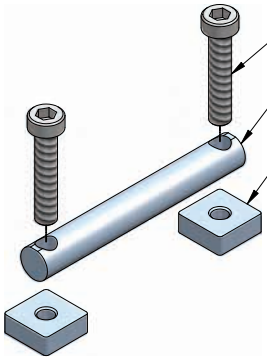

application

used in 40x80 and 80x80 profiles

this type of connection applies for profiles which need to be moved subsequently.

recommended type of connection for addition into existing frames.

bolt connector 80
drilling diagram

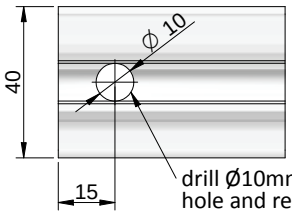

step 1
drill 10mm hole
15mm from end
and ream

drill Ø10mm
hole and ream

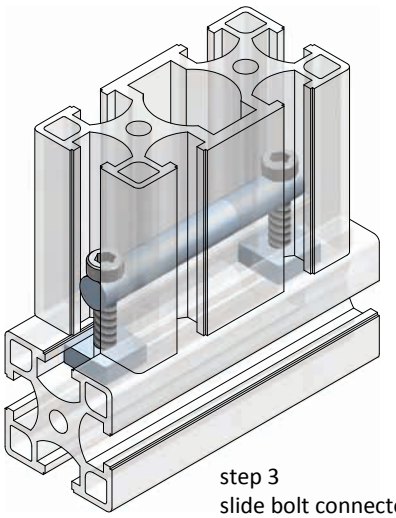

step 3
slide bolt connector 80 into other profile, position in location and tighten firmly with 5mm alen key

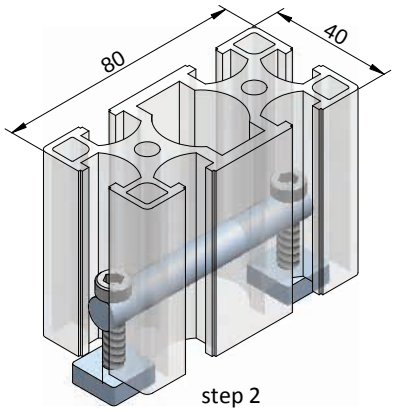

step 2
assembly pin with bolts and square nuts as shown

	60x60	30x60	30x30	30x30/90
	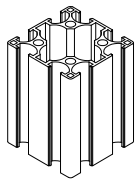	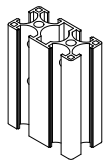	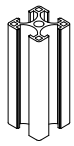	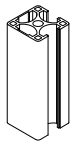
M8-10 bracket connector p/n 026.08 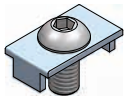 page 77	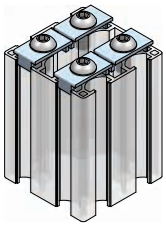	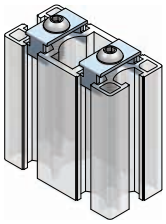		
30x60 plate connector p/n 046.36 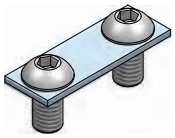 page 78	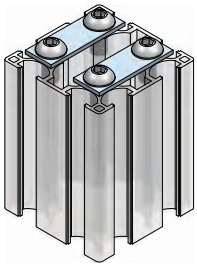	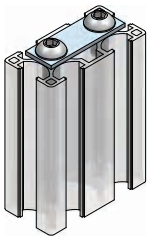		
bolt connector 30 p/n 056.01 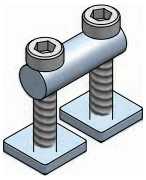 page 79		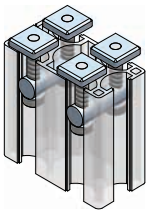		
bolt connector 60 p/n 056.06 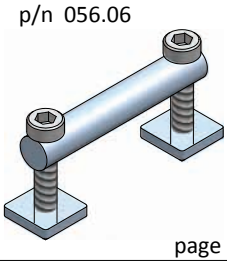 page 80	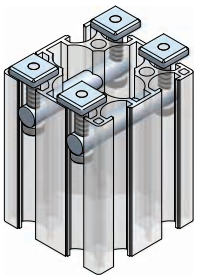	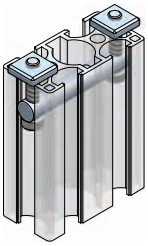		

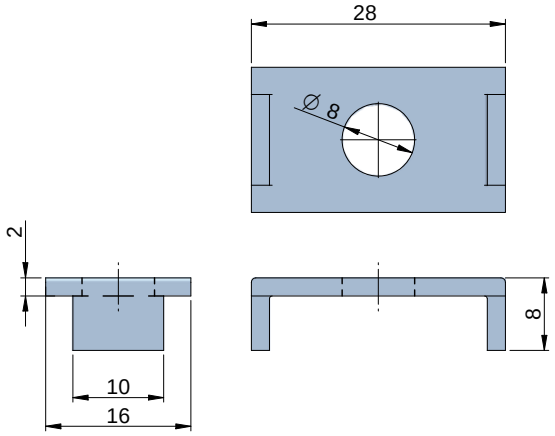

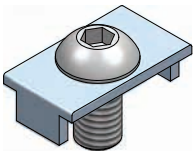

M8-10 bracket connector
Part Number: 026.08

consisting of one M8x16 bolt and one bracket.

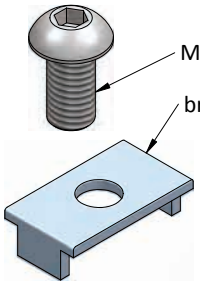

drilling diagram for right angled connection

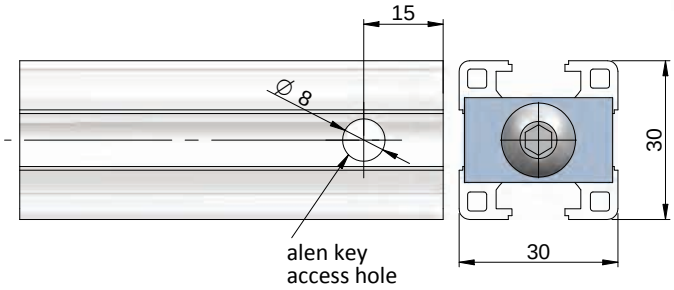

step 1
tap end M8,
20mm deep

step 2
place bracket on top of profile,
screw partially into profile, allow 4-5mm gap

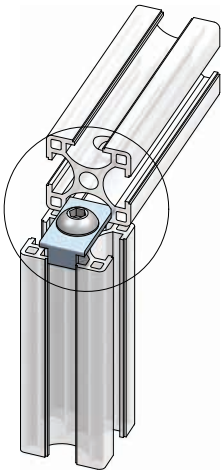

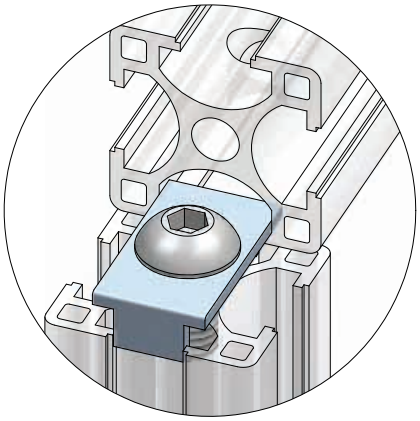

step 3
slide the other piece, line up access hole with bolt in bracket connector assembly

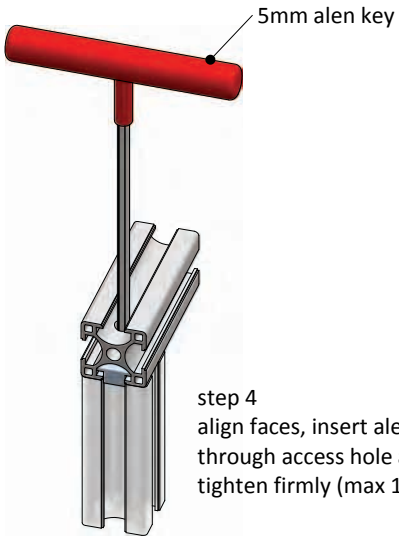

step 4
align faces, insert alen key through access hole and tighten firmly (max 12Nm)

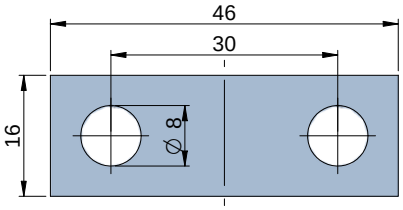

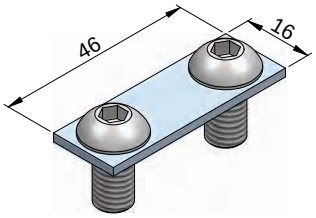

30x60 plate connector
Part Number: 046.36

consisting of two M8x16 bolts and one 30x60 plate

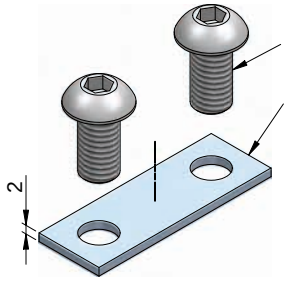

drilling diagram for right angled connection

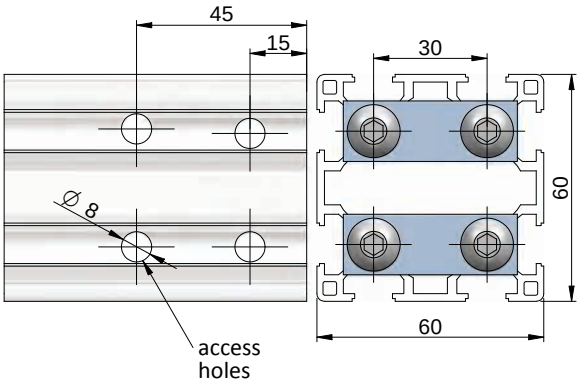

step 2
place plate on top of profile, screw partially into profile, allow 4-5mm gap

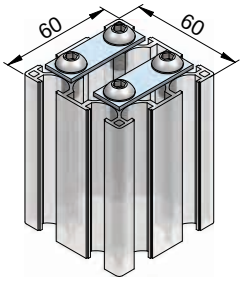

step 1
tap end M8, 20mm deep

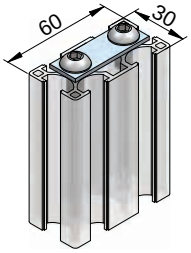

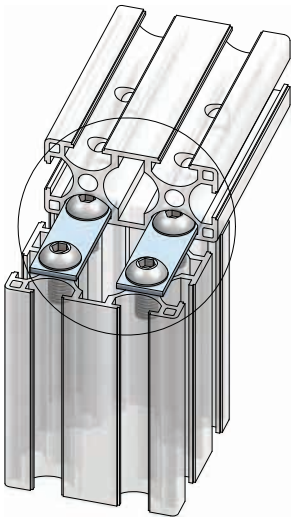

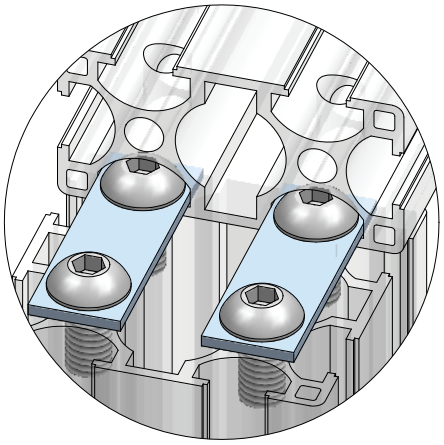

step 3
slide the other piece, line up access hole with bolt in 30x60 plate assembly

5mm alen key

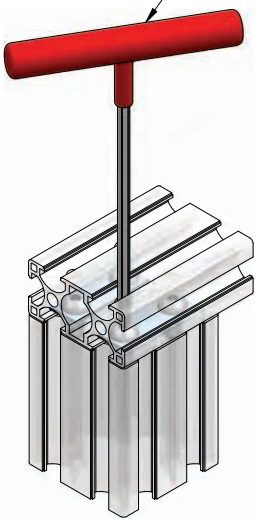

step 4
align faces, insert alen key through access hole and tighten firmly (max 12Nm)

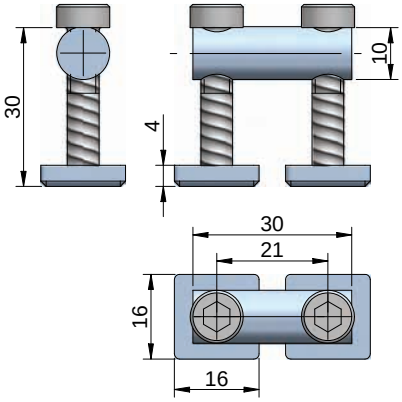

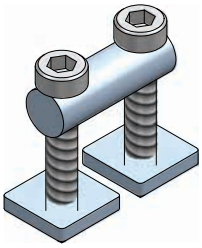

bolt connector 30
Part Number: 056.01

consisting of:
one 10mm pin, 30mm long
two M6x30 cap screws
two 16x16x4/M6 sq nuts

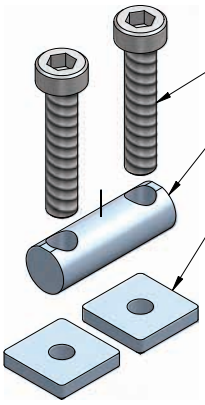

application

used in 30x30 and 30x60 profiles

this type of connection applies for profiles which need to be moved subsequently.

recommended type of connection for addition into existing frames.

bolt connector 30
drilling diagram

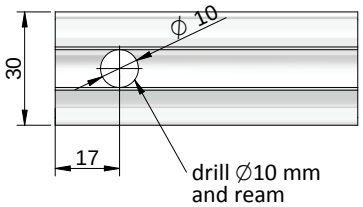

step 1
drill 10mm hole
17mm from end
and ream

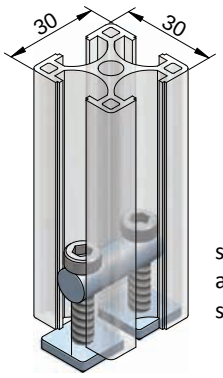

step 2
assembly pin with bolts and
square nuts as shown

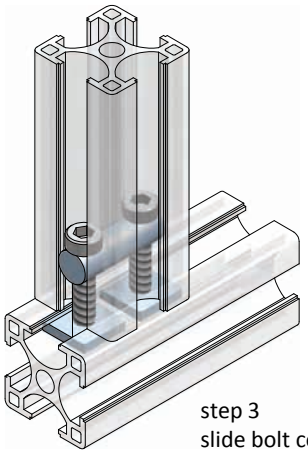

step 3
slide bolt connector 30 into other
profile, position in location and
tighten firmly with 5mm alen key

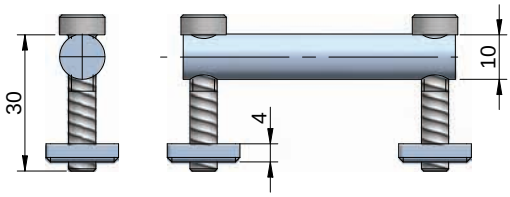

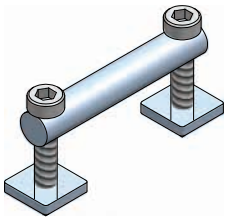

bolt connector 60
Part Number: 056.06

consisting of:
one 10mm pin, 60mm long
two M6x30 cap screws
two 16x16x4/M6 sq nuts

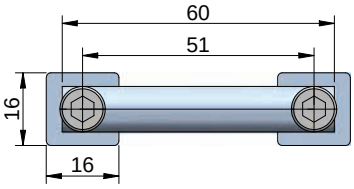

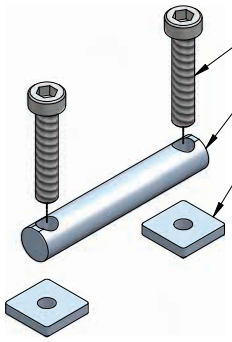

application

used in 30x60 and 60x60 profiles

this type of connection applies for profiles which need to be moved subsequently.

recommended type of connection for addition into existing frames.

bolt connector 60
drilling diagram

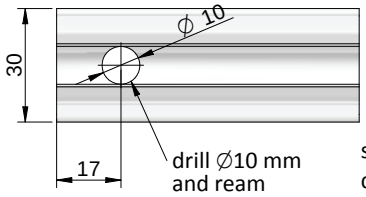

step 1
drill 10mm hole
17mm from end
and ream

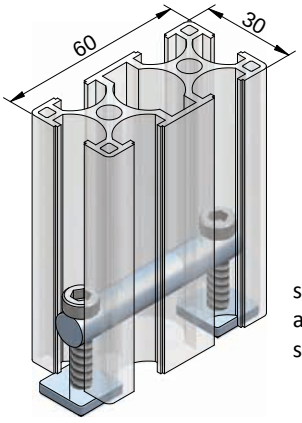

step 2
assembly pin with bolts and
square nuts as shown

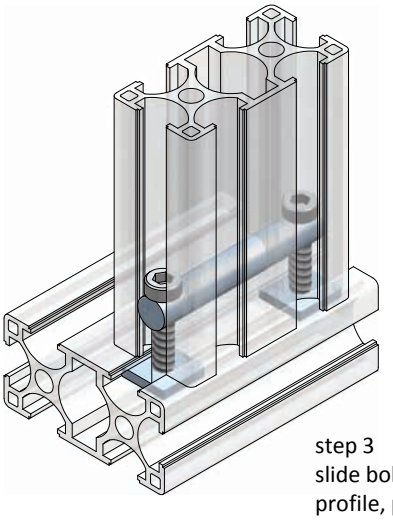

step 3
slide bolt connector 60 into other
profile, position in location and
tighten firmly with 5mm alen key

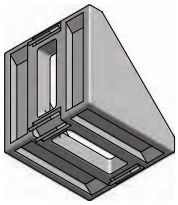

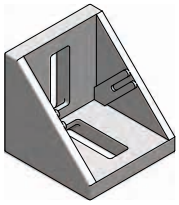

40x40 corner bracket
Part Number: 562.44

used with 40 series profiles
material: die cast aluminium

30x30 corner bracket
Part Number: 562.33

used with 30 series profiles
material: die cast aluminium

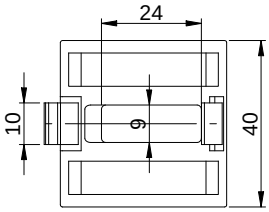

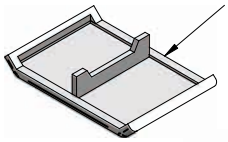

40x40 corner bracket
endcap

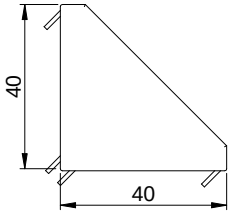

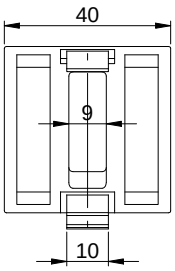

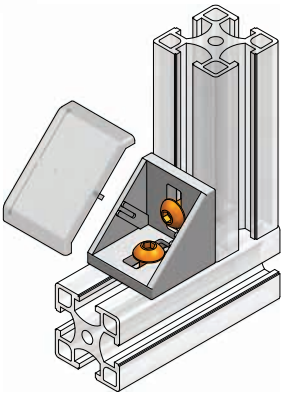

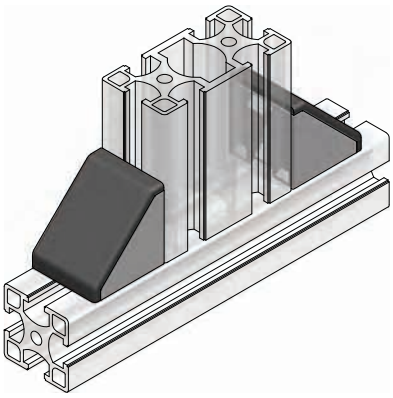

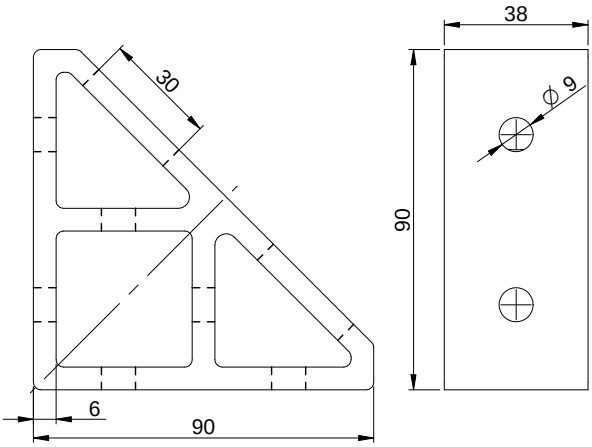

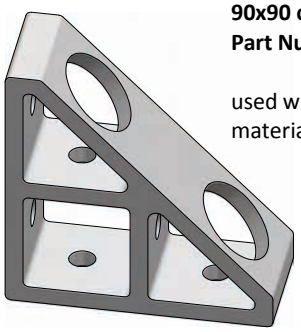

90x90 corner bracket
Part Number: 562.99

used with 40 series profiles
material: aluminium

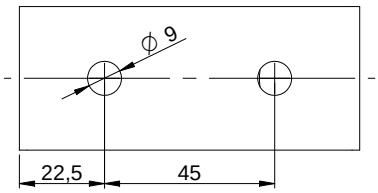

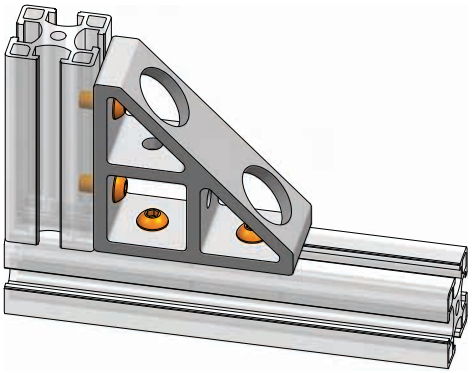

typical application

- mounting panels
- table top
- switches, accessories
- assembly jigs
- fastening profiles

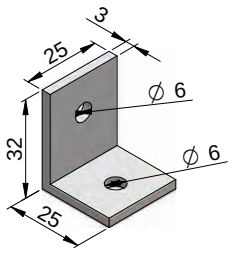

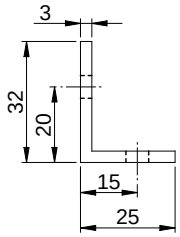

32x25x3 angle
Part Number: 026.20

used with 40 & 30 series profiles

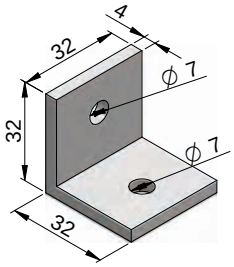

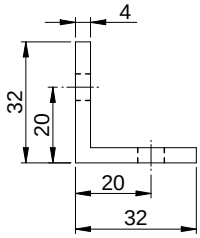

32x32x4 angle
Part Number: 026.23

light duty angle used with 40 series profiles

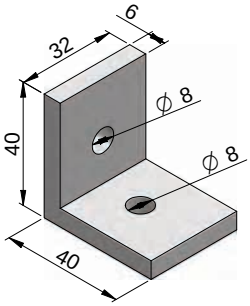

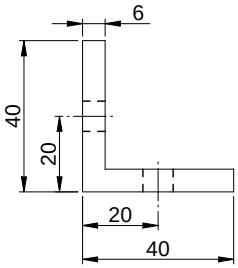

40x40x6 angle
Part Number: 026.43

heavy duty angle, used with 40 series profiles

possible uses

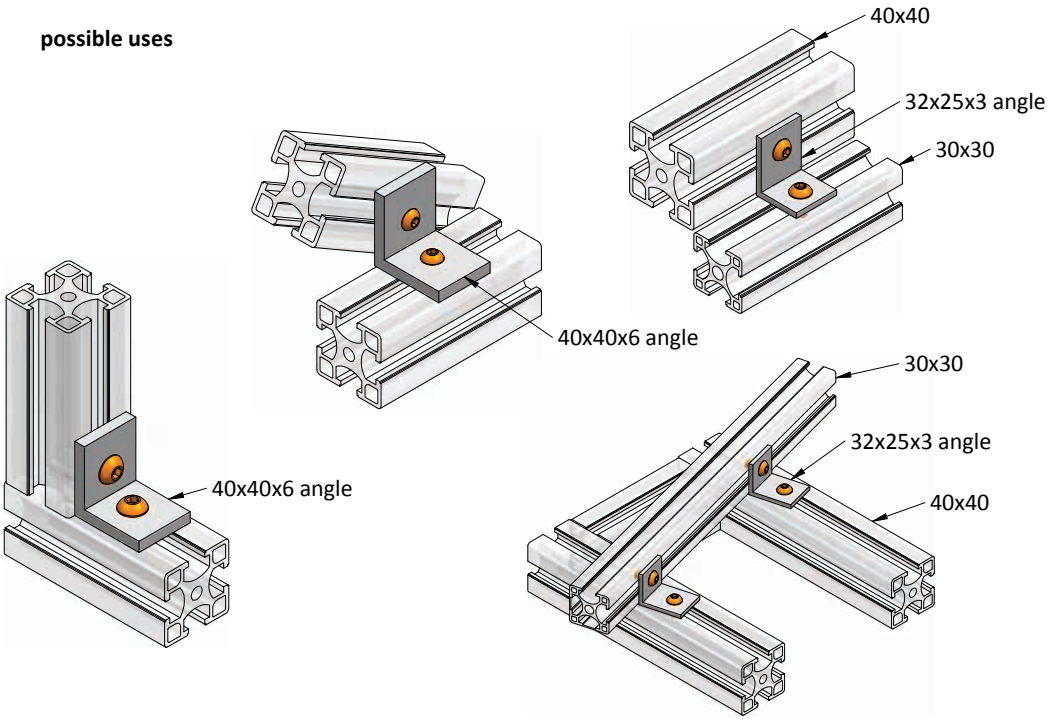

typical application

used with bracket connector when
addtional joint strength is required

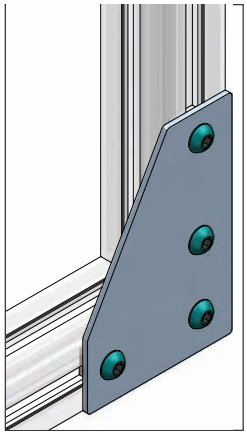

L - type bracing plate

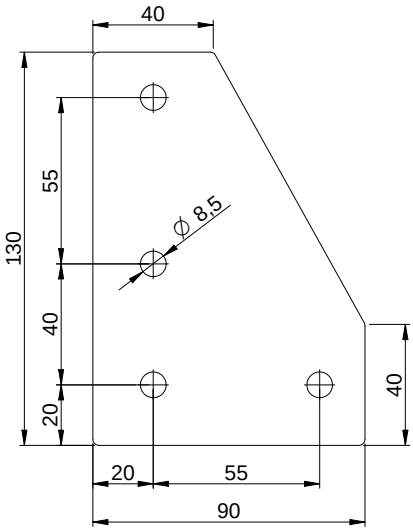

bracing plate - L type
Part Number: 562.24

material: 3mm mild steel, z/plated
(bolts and square nuts not included)

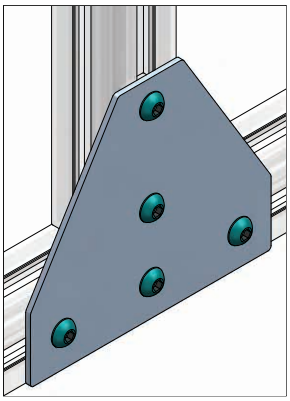

T - type bracing plate

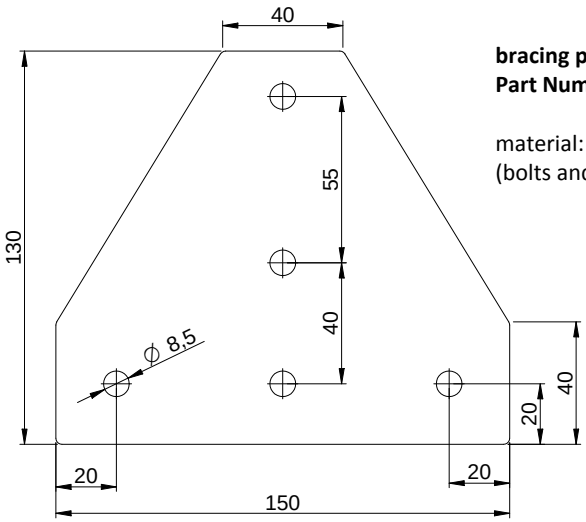

bracing plate - T type
Part Number: 562.26

material: 3mm mild steel, z/plated
(bolts and square nuts not included)

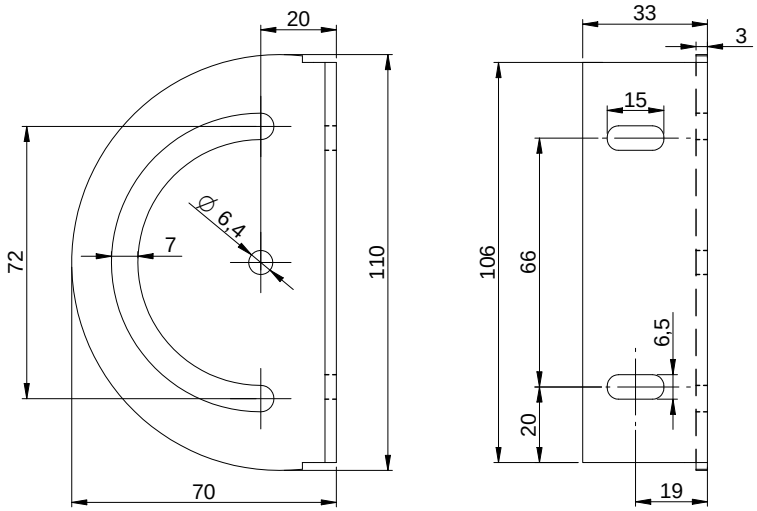

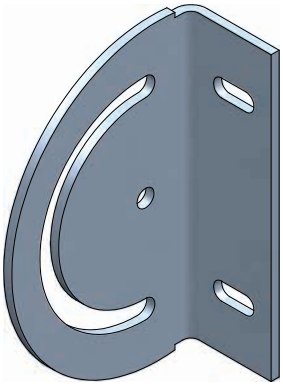

tilt bracket
Part Number: 562.35

material: 3mm mild steel, z/plated
(bolts, square nuts and adjustable handle are not included)

typical application

use for adjusting angle in shelves or just pivoting two aluminium profiles where quick and easy adjustment is required.

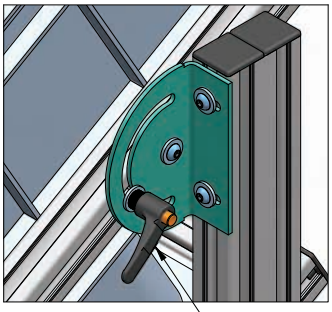

adjustable handle
p/n 380.73, M6x16

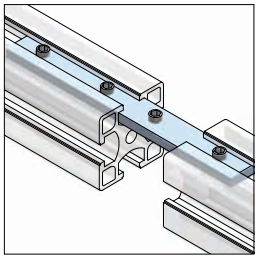

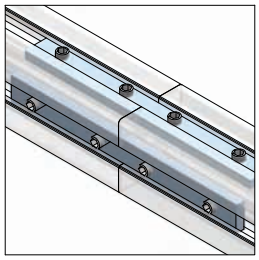

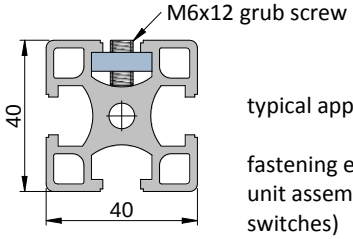

typical application

fastening element for facilitated unit assembly (valves, limit switches)

joining and extending profiles vertically or horizontally.

easy positioning and fixing in the profile groove.

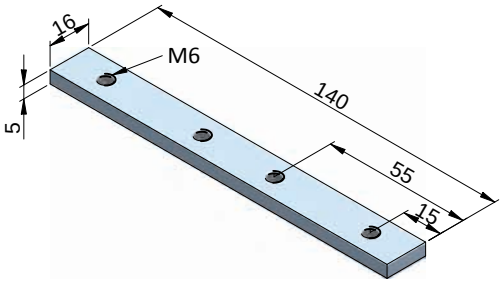

sliding bar 16x5x140 (4xM6)
Part Number: 026.58

used with 40 series profiles
material: 16x5mm mild steel, z/plated

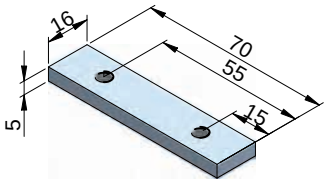

sliding bar 16x5x70 (2xM6)
Part Number: 026.59

used with 40 series profiles
material: 16x5mm mild steel, z/plated

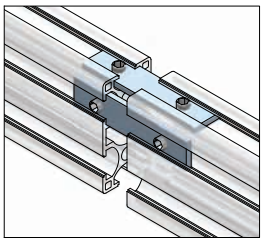

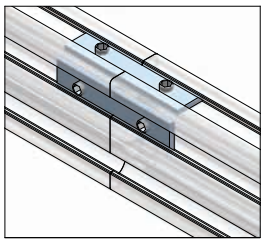

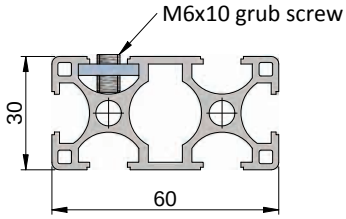

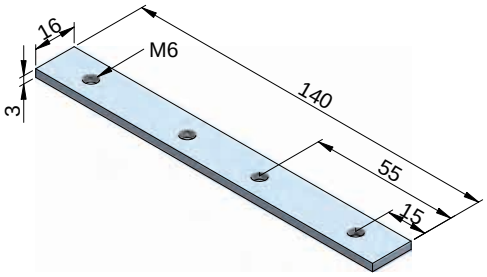

sliding bar 16x3x140 (4xM6)
Part Number: 027.15

used with 30 series profiles
material: 16x3mm mild steel, z/plated

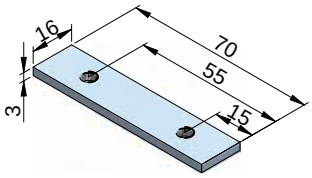

sliding bar 16x3x70 (2xM6)
Part Number: 027.17

used with 30 series profiles
material: 16x3mm mild steel, z/plated

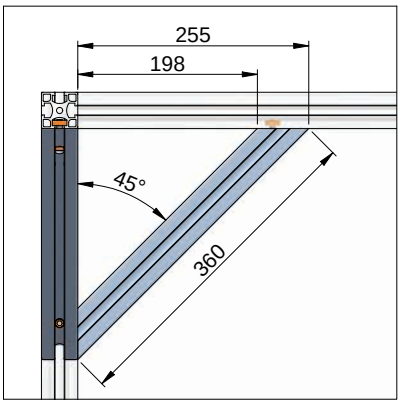

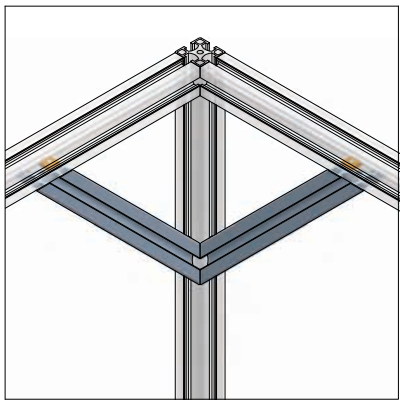

typical application

simple and fast way of reducing profiles bending or sagging under heavier vertical loads

reduces frames buckling and stabilizes the frame structure.

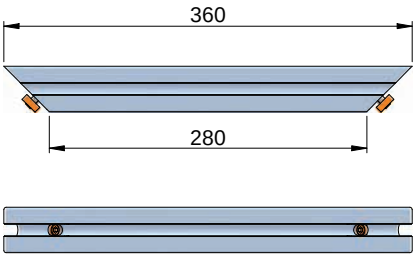

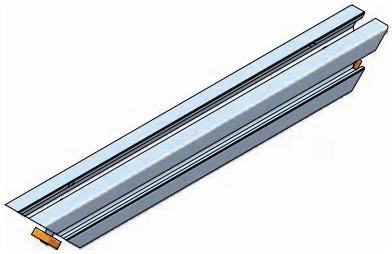

bracing element 40x40 360mm
Part Number: 562.30

used only with 40 series profiles
material: 40x40 profile
(complete with bolt and square nut)

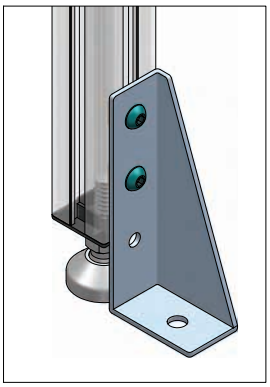

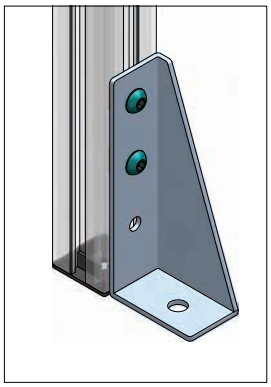

typical application

for floor or wall fastening in various positions

suitable for 30 and 40 series profiles

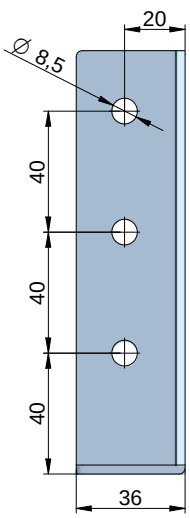

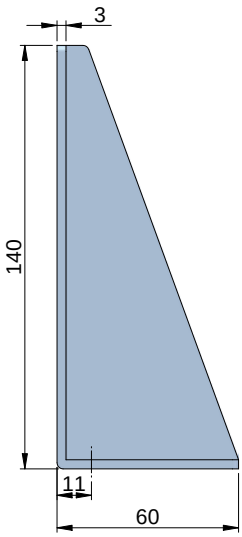

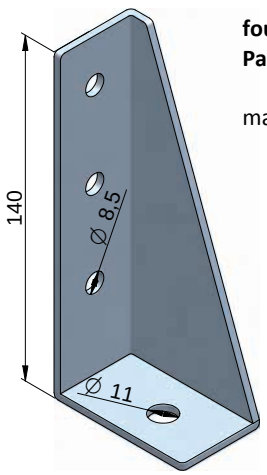

foundation bracket
Part Number: 560.10

material: mild steel, z/plated

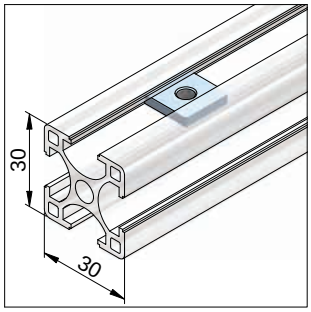

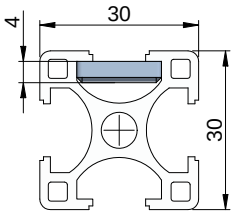

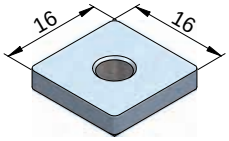

typical application

universal fastening element for mounting of any components to profiles

particularly suitable for heavier loading capacity

allows easy movement within the slot

16x16x4/M6 square nut
Part Number: 427.26

16x16x3/M5 square nut (3mm thick)
Part Number: 427.25

for 30 and 40 series profiles
material: mild steel, z/plated

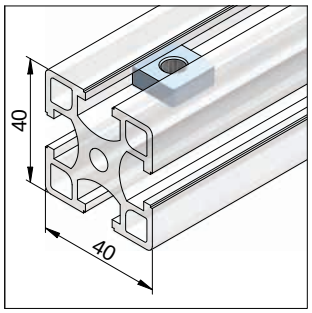

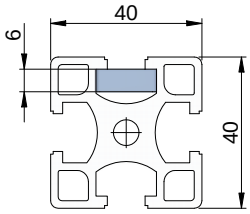

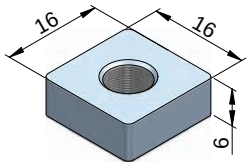

16x16x6/M6 square nut
Part Number: 427.06

16x16x6/M8 square nut
Part Number: 427.08

used with 40 series profiles
material: mild steel, z/plated

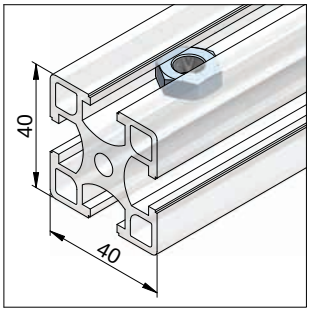

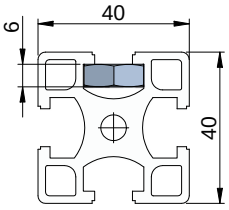

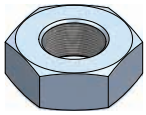

M10 half hex nut
Part Number: 427.01

used with 40 series profiles
material: mild steel, z/plated

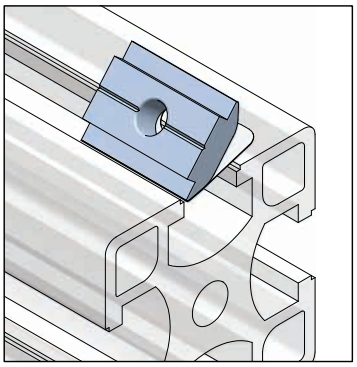

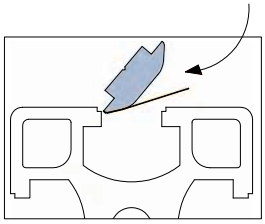

typical application

can be inserted at any point in the profile slot

particularly suitable for additions into existing installations

used with 40 series profiles

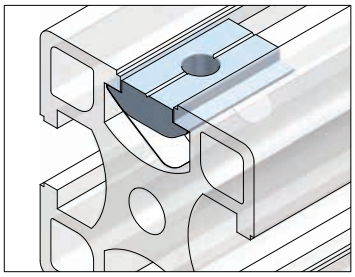

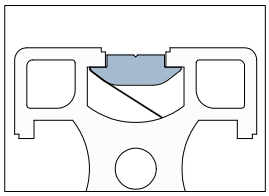

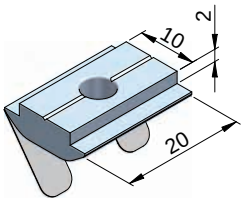

M6 spring nut
Part Number: 428.66

M8 spring nut
Part Number: 428.88

Material: mild steel, z/plated

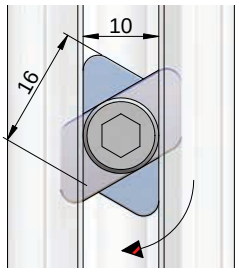

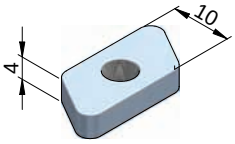

M6 slot nut
Part Number: 426.16

M5 slot nut
Part Number: 426.15

Material: mild steel, z/plated

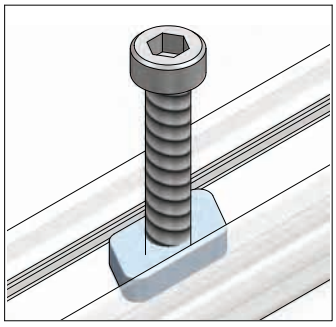

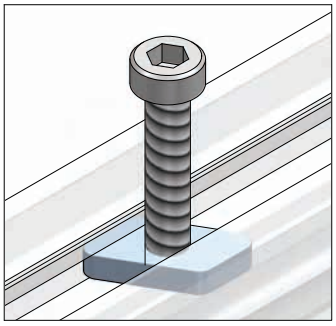

typical application

light duty fastener can be inserted at any point in the profile slot

particularly suitable for additions into existing installations

used with 40 and 30 series profiles

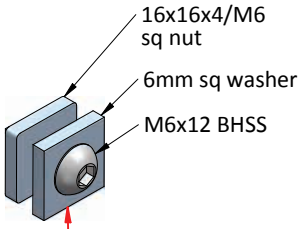

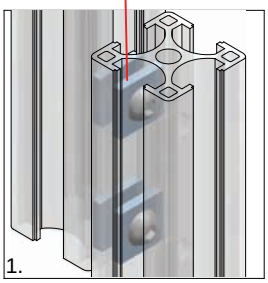

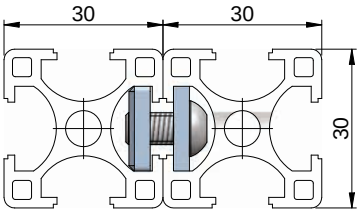

typical application

suitable for 30 and 40 series profiles for face fastening (slots are facing each other), angled connection.
right angled connection when square cut panels are used, for more details refer to page 97

not suitable for heavier loads

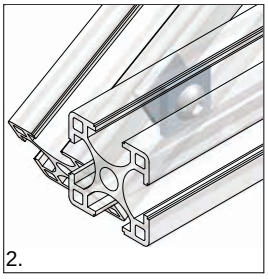

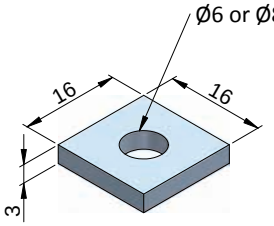

6mm square washer
Part Number: 426.36

8mm square washer
Part Number: 426.38

material: 3mm mild steel, z/plated

possible uses for 6mm square washer:
1. join 30x30 to 30x30 profile
2. angled connection

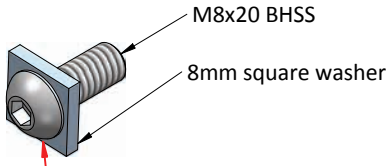

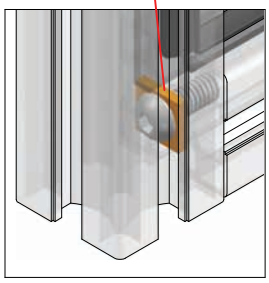

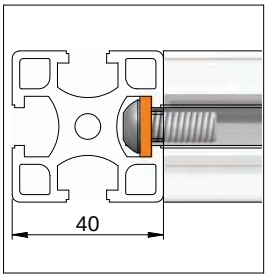

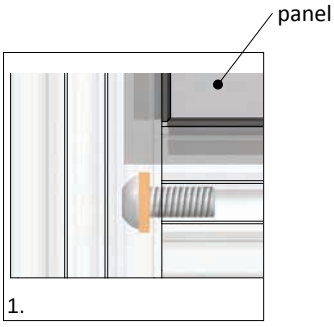

possible uses for 8mm square washer:
1. 40x40 profiles with square cut panel
for more details refer to page 97

hinge 30/30
Part Number 388.33

non-detachable hinge
to suit 30 series profiles
Material: black nylon

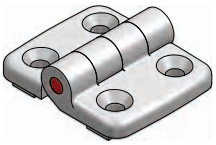

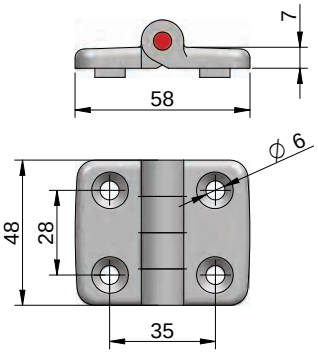

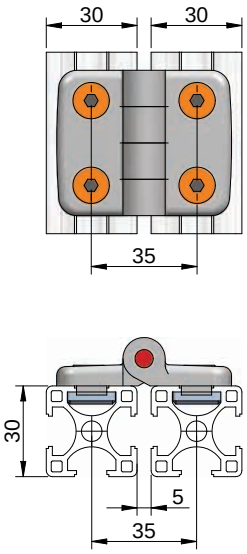

hinge 30/40
Part Number 388.34

non-detachable hinge
to suit 30 and 40 series profiles
Material: black nylon

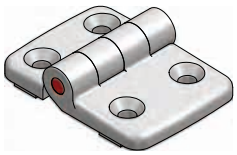

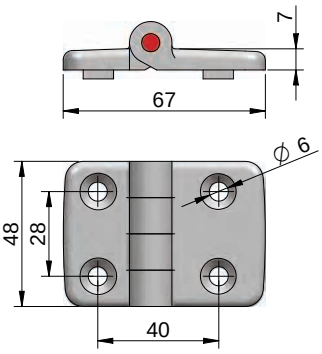

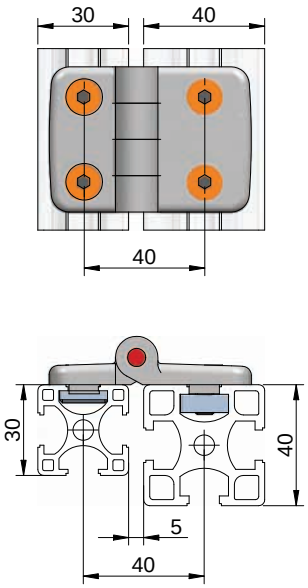

hinge 40/40
Part Number 388.44

non-detachable hinge
to suit 40 series profiles
Material: black nylon

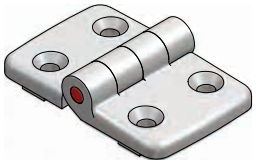

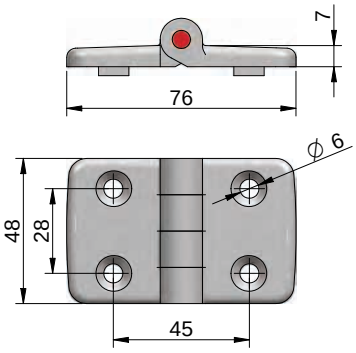

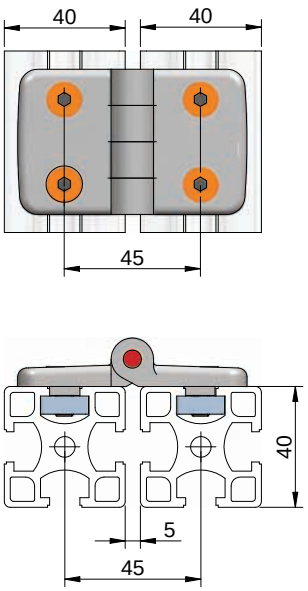

installation hints

M6x12 c/sunk screw for 30 series profiles
M6x16 c/sunk screws for 40 series profiles

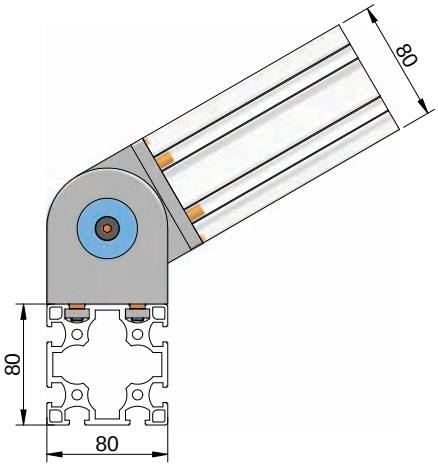

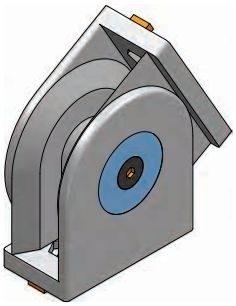

heavy duty hinge 40x80
Part Number 373.91

for connecting profiles
at various angles, suits
40 series profiles
supplied with twelve
locating blocks

Material: Zn/cast

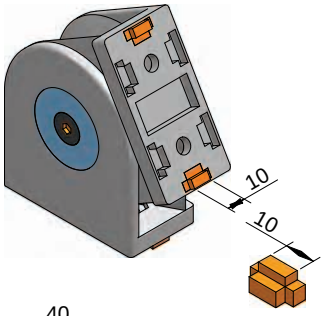

locating block
inserted into hinge base
according to aluminium
profile slot direction

six blocks for end profile
connection

two or four blocks for
profile slot connection

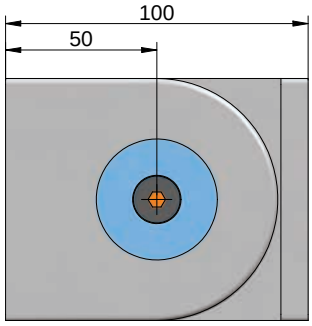

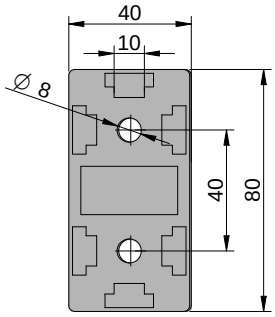

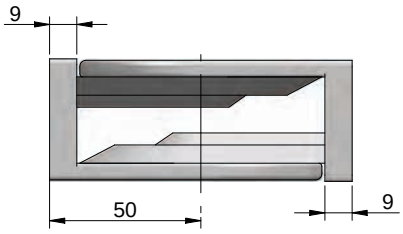

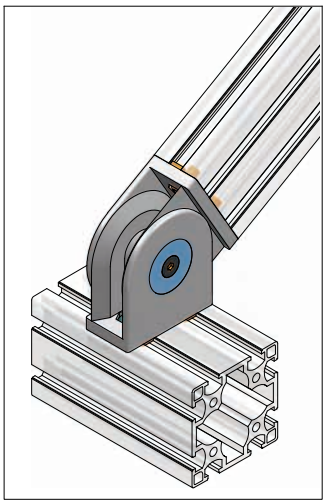

possible uses:
1. 80x80 to 40x80 profile
2. 40x80 to 40x40 profile

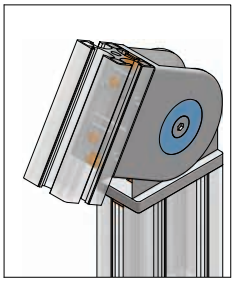

1. 2.

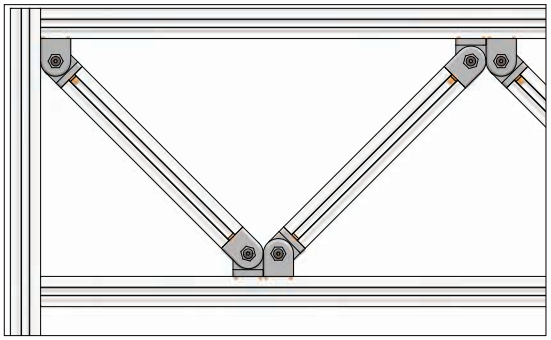

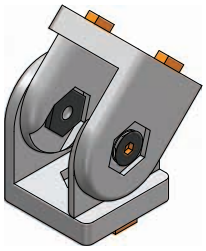

heavy duty hinge 40x40
Part Number 373.31

for connecting profiles at various angles, suits 40 series profiles supplied with eight locating blocks

Material: Zn/cast

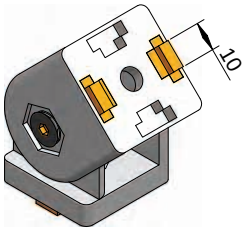

heavy duty hinge 30x30
Part Number 373.33

suits 30 series profiles

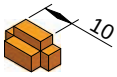

locating block inserted into hinge base according to aluminium profile slot direction

four blocks for end profile connection

two blocks for profile slot connection

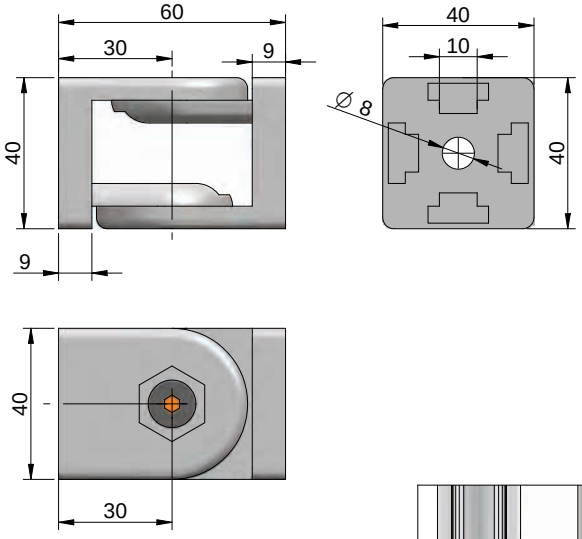

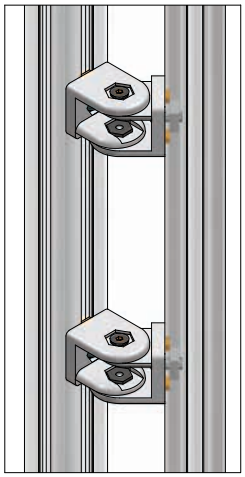

1.

possible uses:
1. heavy doors
2. swivel type arm

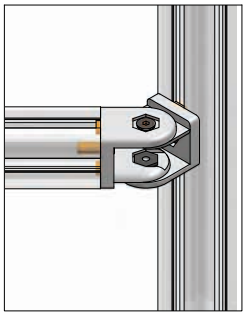

2.

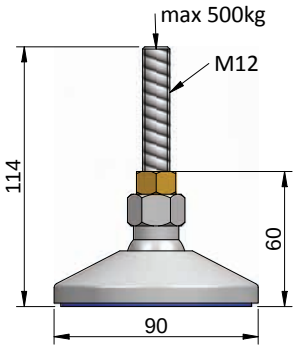

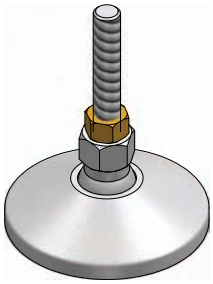

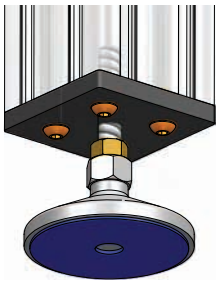

foot Ø90xM12
Part Number: 560.90

swivel range: 20 deg.
max. load: 500kg

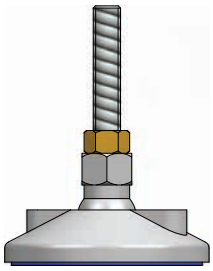

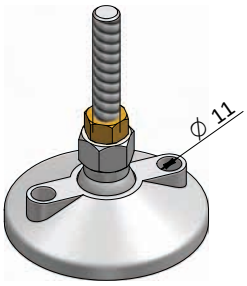

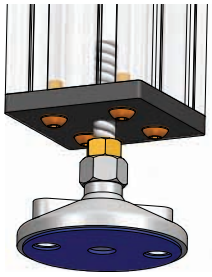

foot Ø90xM12
with mounting holes
Part Number: 560.92

swivel range: 20 deg.
max. load: 500kg

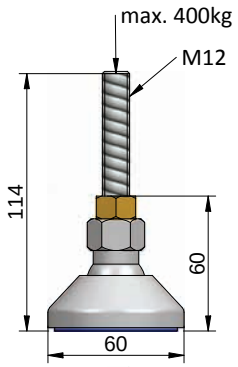

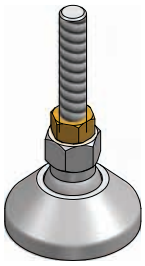

foot Ø60xM12
Part Number: 560.60

swivel range: 20 deg.
max. load: 400kg

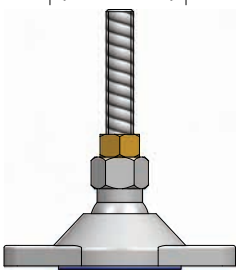

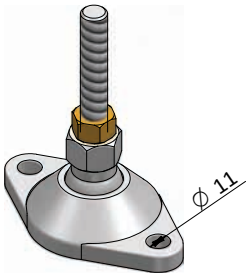

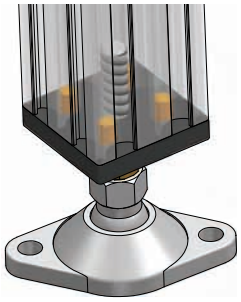

foot Ø60xM12
with mounting holes
Part Number: 560.62

swivel range: 20 deg.
max. load: 400kg

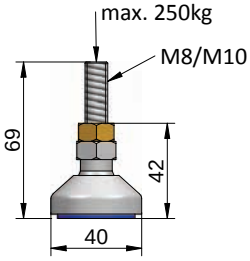

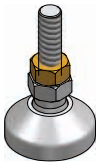

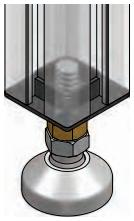

foot Ø40xM10
Part Number: 560.40

foot Ø40xM8
Part Number: 560.43

swivel range: 20 deg.
max. load: 250kg

foot Ø40 with mounting holes

foot Ø40xM10
Part Number: 560.44

foot Ø40xM8
Part Number: 560.46

swivel range: 20 deg.
max. load: 250kg

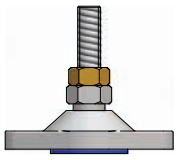

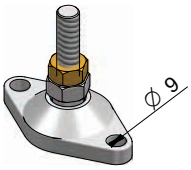

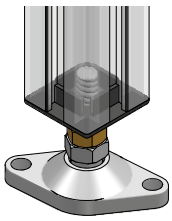

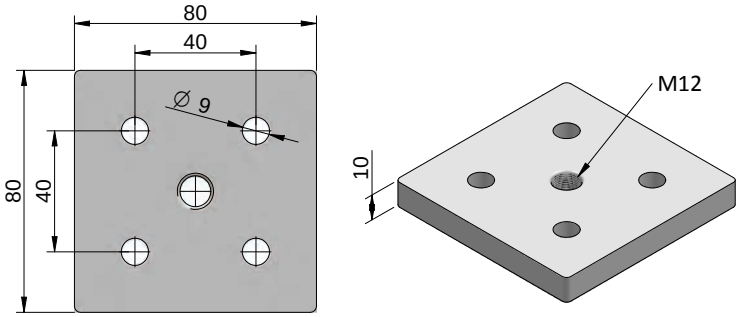

foot plate 80x80
Part Number: 406.22

material: 10mm aluminium
finish: natural anodised

to suit 80x80 profile, for mounting feet or castors

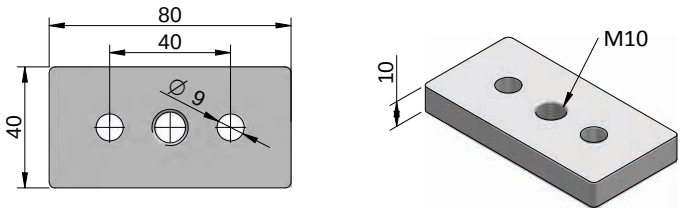

foot plate 40x80
Part Number: 406.32

material: 10mm aluminium
finish: natural anodised

to suit 40x80 profile, for mounting feet or castors

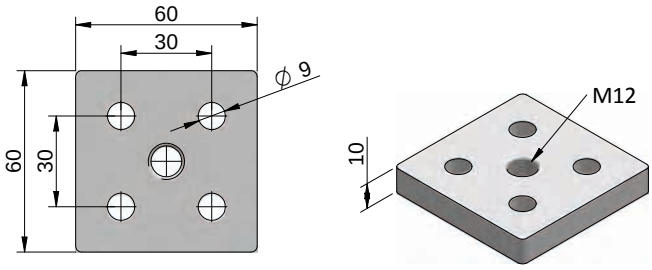

foot plate 60x60
Part Number: 410.66

material: 10mm aluminium
finish: natural anodised

to suit 60x60 profile, for mounting feet or castors

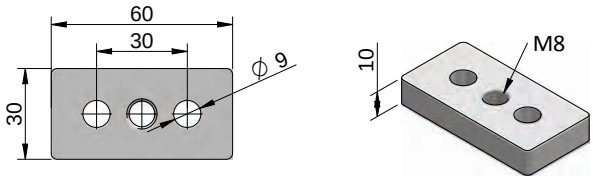

foot plate 30x60
Part Number: 406.36

material: 10mm aluminium
finish: natural anodised

to suit 30x60 profile, for mounting feet or castors

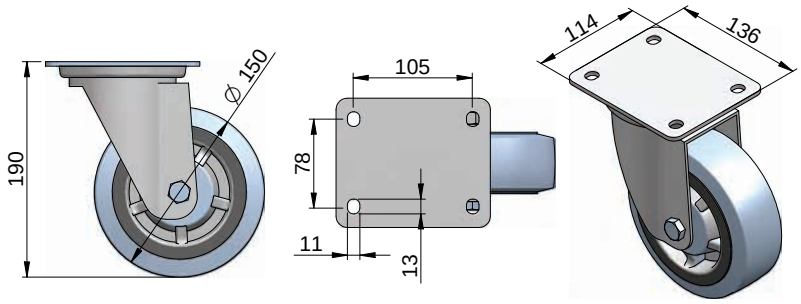

plate mount Ø150 wheel, swivel
Part Number: 470.15
470.16 with brake

load capacity: 240kg

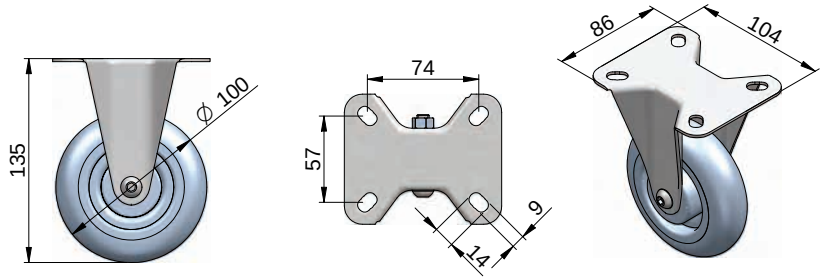

plate mount Ø100 wheel, fixed
Part Number: 470.30

load capacity: 85kg

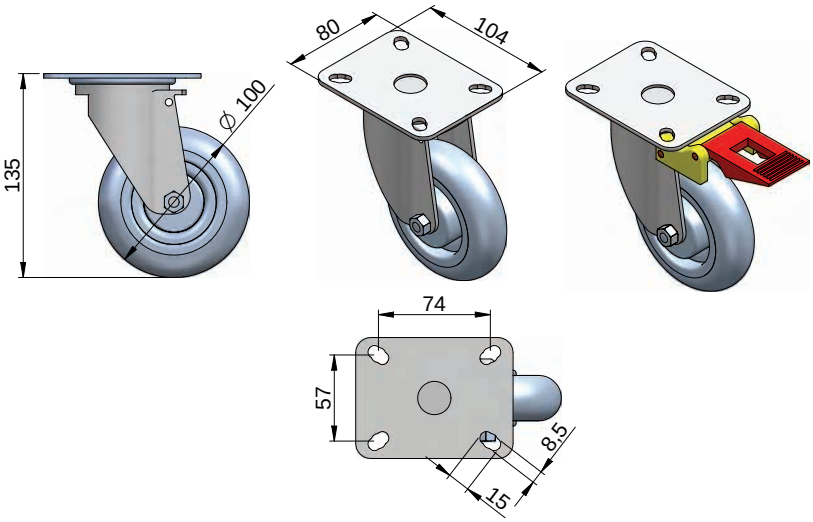

plate mount Ø100 wheel, swivel
Part Number: 470.40
470.41 with brake

load capacity: 85kg

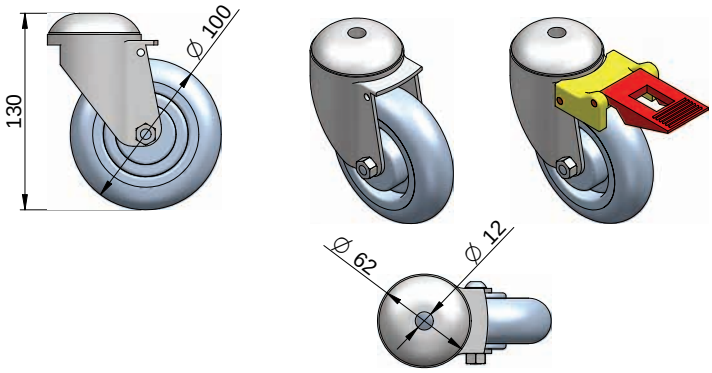

bolt mount Ø100 wheel, swivel
Part Number: 470.50
470.51 with brake

load capacity: 65kg

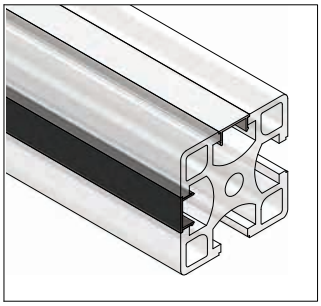

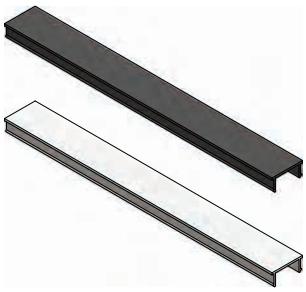

application
enhances the appearance of the finished installation

securing electrical cables and pneumatic tubes laid in the slot

cover strip - black
Part Number: 265.50

cover strip - grey
Part Number: 265.52

material: PVC rigid, max. L = 2000mm

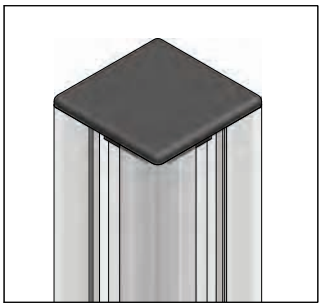

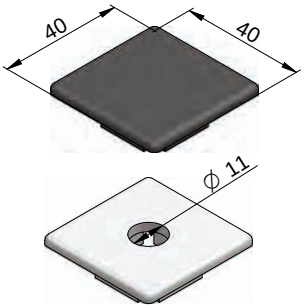

application
it is recommended to insert end caps to all exposed ends of profiles, including castors and levelling feet as a safety measure as sharp corners of profiles may cause injuries

end cap 30x30 (black or grey)
Part Number: 370.11

end cap 40x40 (black or grey)
Part Number: 370.12

material: PA 6 (black or grey)

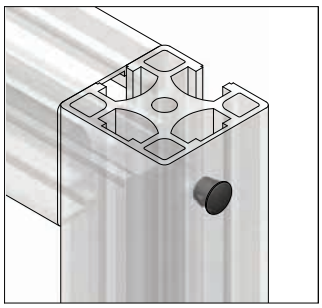

application

to cover access hole after profile connection

8mm plastic plug
Part Number: 265.52

material: PA 6 black
Please note: hole size to be 8mm

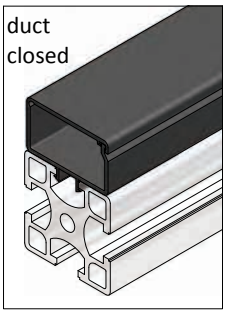

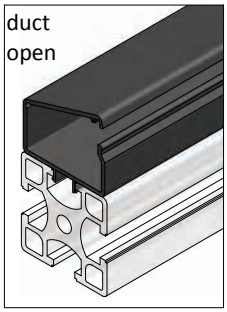

application

to house excess electrical cables or pneumatic tubes

no tools required,
just insert into slot

suitable for 30 and 40 series profiles

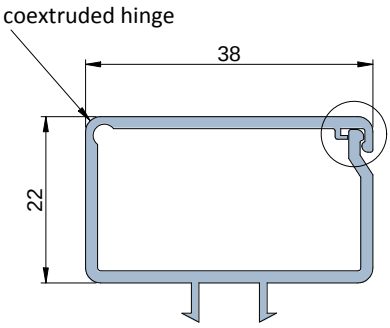

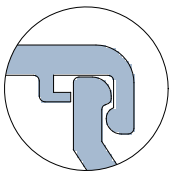

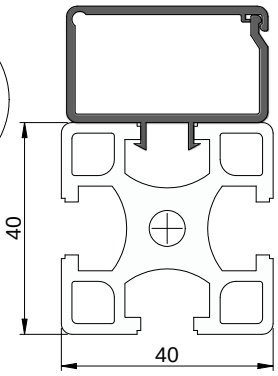

cable duct, black
Part Number: 265.80

material: rigid PVC
with coextruded hinge
max. L=2000mm

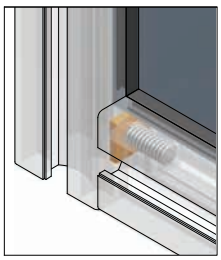

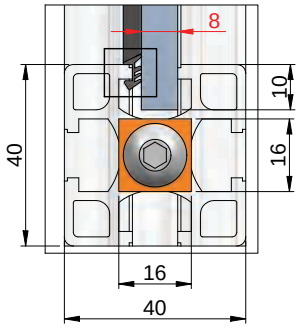

typical application

for securing panel elements of 6 or 8mm thickness which are inserted into profiles slots, no adhesives required, just push into the slot.

using lubricant such as soapy water is essential to ensure proper location of the wedge

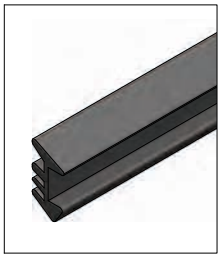

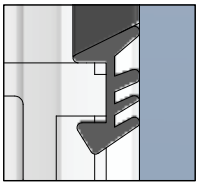

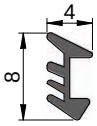

rubber wedge 4mm
Part Number: 265.54

Material: synthetic rubber

used with **8mm** thick panels
for 30 and 40 series profiles

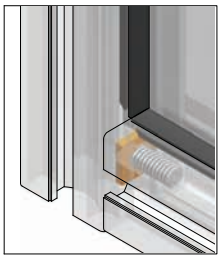

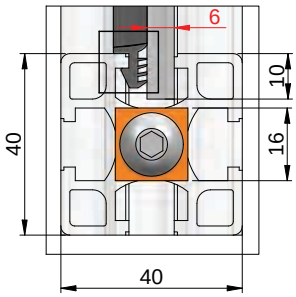

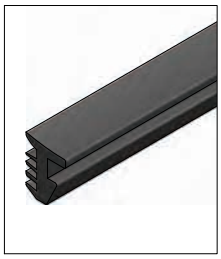

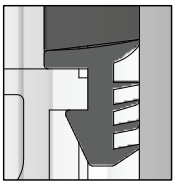

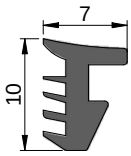

rubber wedge 6mm
Part Number: 265.56

Material: synthetic rubber

used with **6mm** thick panels
for 30 and 40 series profiles

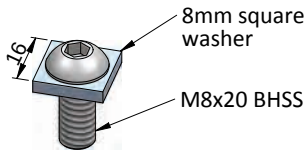

square washer connector

installation hints

use square washer connector if using square cut panels

1. panels size calculation for 40x40 series profiles:
inside frame size + 10mm each side
e.g. inside frame = 520x640, panels size: 540x660

2. panels size calculation for 30x30 series profiles
inside frame size + 6mm each side
e.g. inside frame = 470x580, panels size: 482x592

panel elements may need to be notched at their corners when other connectors are used

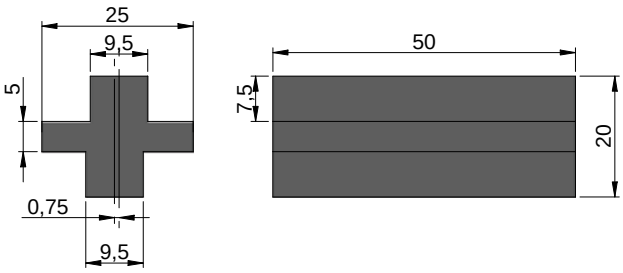

typical application

for construction of sliding doors used for horizontal or vertical installations with framed panel elements.

to be installed as per shown diagram and drawings below

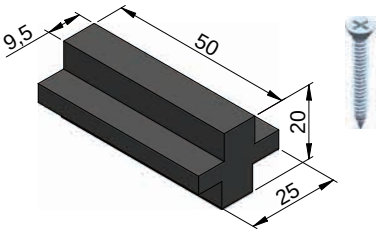

sliding block set
Part Number: 406.66

4 sliding block pieces
8 self-tapping screws

used with 40 & 30 series profiles

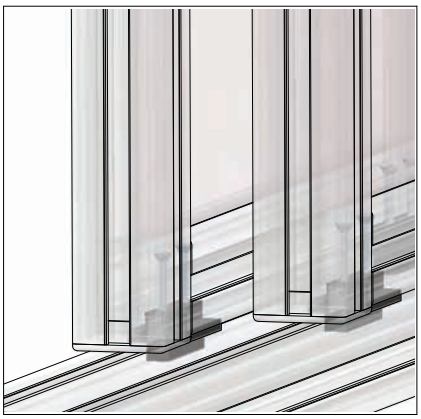

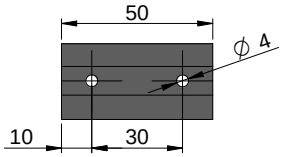

1. drill two 4mm holes in sliding block as shown

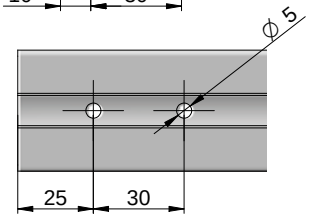

2. drill two 5mm holes on each end of aluminium profile as shown

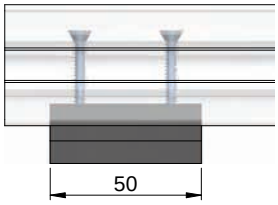

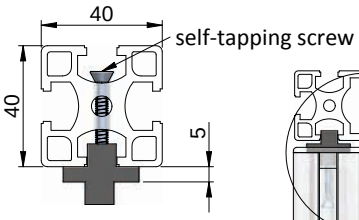

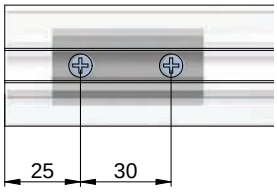

3. tighten sliding block to aluminium profile using self-tapping screws

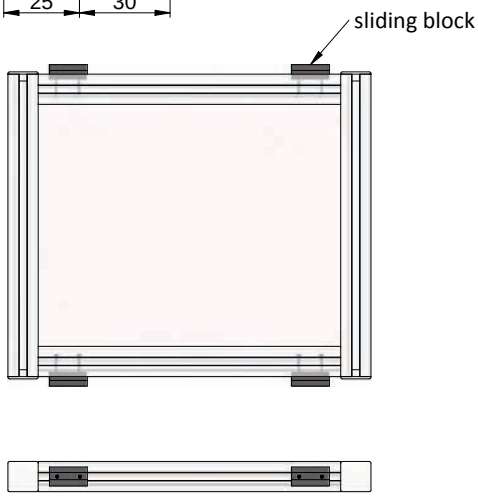

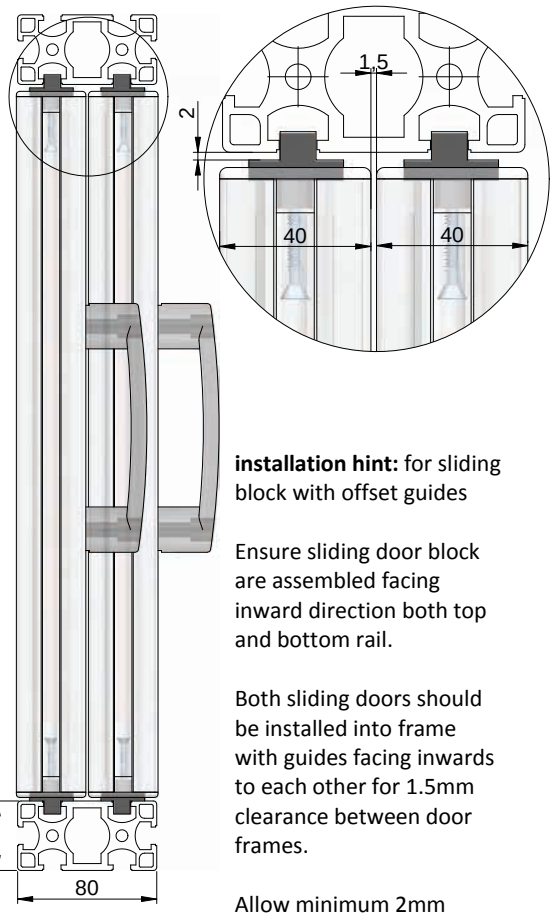

installation hint: for sliding block with offset guides

Ensure sliding door block are assembled facing inward direction both top and bottom rail.

Both sliding doors should be installed into frame with guides facing inwards to each other for 1.5mm clearance between door frames.

Allow minimum 2mm clearence for vertical height

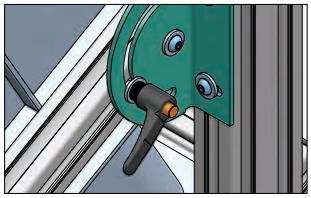

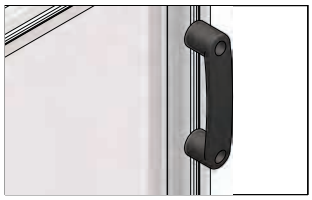

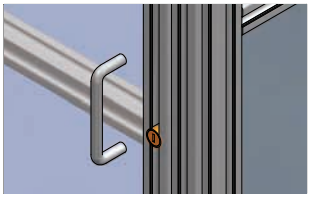

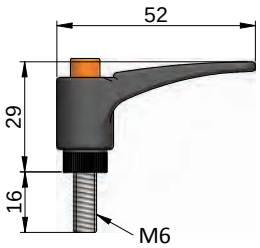

adjustable handle L52/M6x16
Part Number: 380.71

material: technopolymer

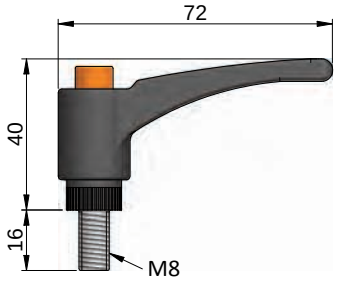

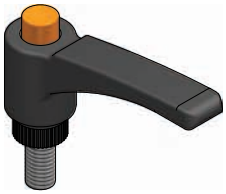

adjustable handle L72/M8x16
Part Number: 380.73

material: technopolymer

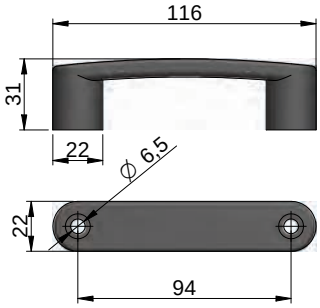

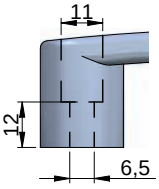

D - handle 110-6
Part Number: 382.16

material: technopolymer

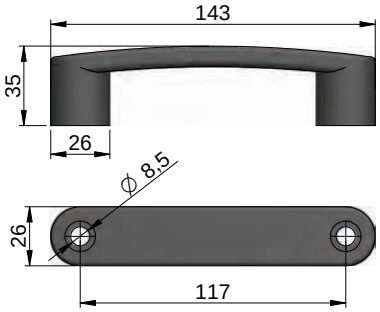

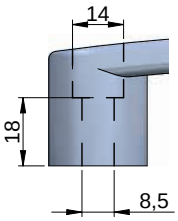

D - handle 140-8
Part Number: 382.14

material: technopolymer

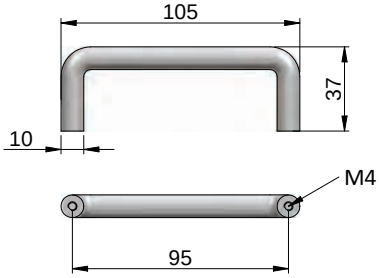

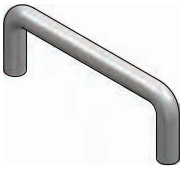

D - handle 105-4
Part Number: 382.12

material: stainless steel
suitable for solid panels

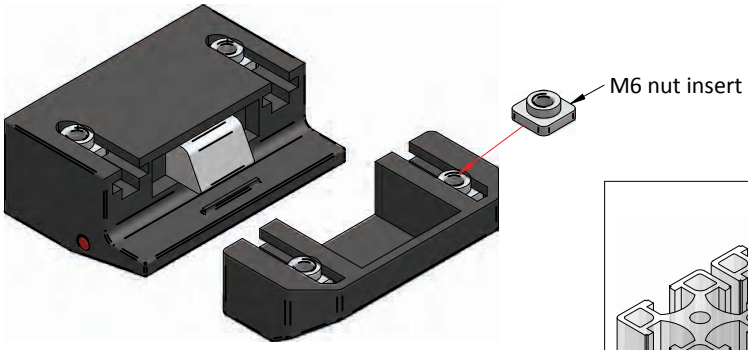

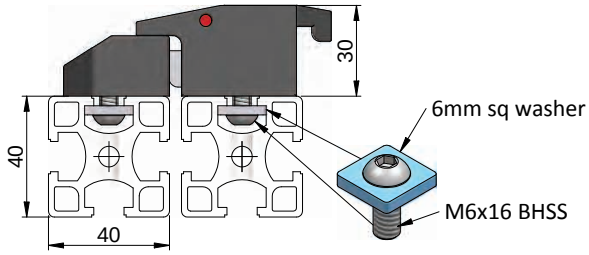

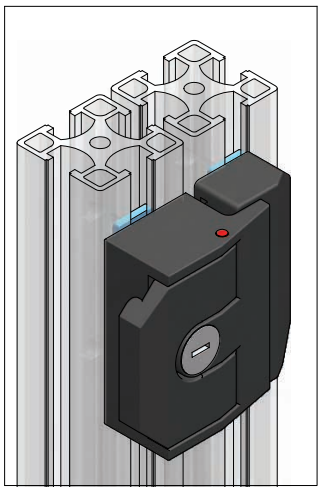

application

for locking and securing hinged doors, can be used for left-hand or right-hand installation

suitable for machine enclosures, fencing or cabinet doors

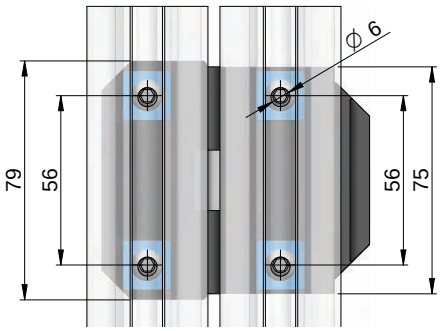

drill access holes at 56mm pitch
as shown for slam latch installation

slam latch
used with 40 series profiles
Part Number: 382.48

material: die-cast, black set of
M6 nut inserts are included

for installation as shown, order:
4x M6x16 BHSS
4x 16x16x3 6mm square washers

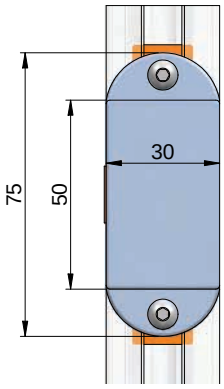

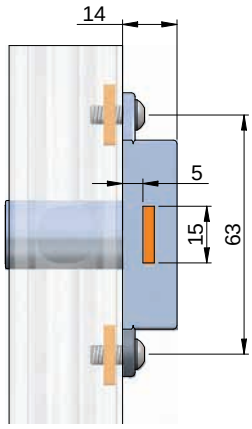

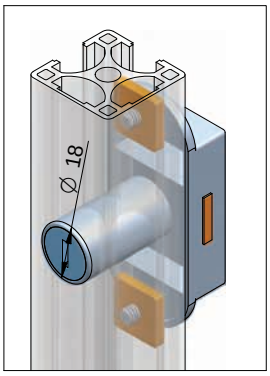

application

for locking and securing light duty hinged doors on computer enclosures or small cabinets

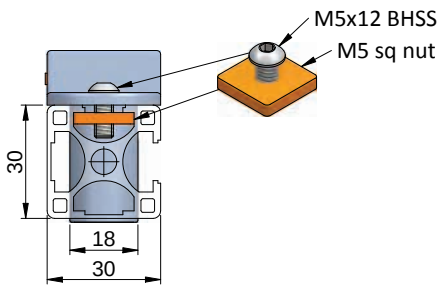

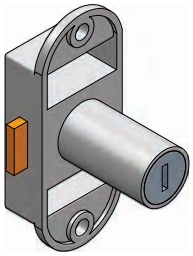

door lock
used with 30 series profiles
Part Number: 382.58

material: die-cast, crome plated
M5x12 BHSS and sq nuts are
included

grub socket screw
M6x10
M6x12
M6x16

button head socket screw
M5x10
M5x12
M5x16

M6x10
M6x12
M6x16

M8x12
M8x16
M8x20

coutersink head socket screw
M5x10
M5x12
M5x16

M6x10
M6x12
M6x16

M8x12
M8x16
M8x20

socket head cap screw
M6x12
M6x30

hexagon head bolts
M8x12
M8x16
M8x20

M10x20
M10x25
M10x30

hexagon nut
M5
M6
M8
M10

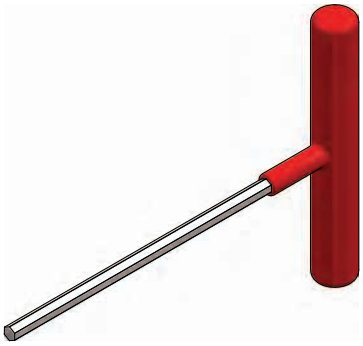

T wrench handle alen key
4mm
5mm
6mm

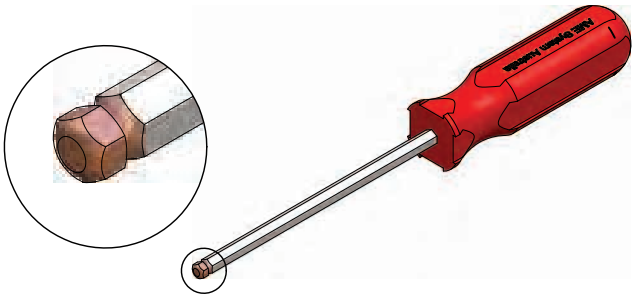

ball end driver alen key
3mm
4mm
5mm
6mm